FORM MS–9828–03/10/2004
REPLACES FORM MS–9828–09/03/2003
FILE IN SECT. 2 OF SERVICE MANUAL

Illustrated Parts List

Model Series

294400

TYPE NUMBERS
0030 through 1278.

TABLE OF CONTENTS

Air Cleaners 8
Alternator 17
Blower Housings 14
Cams 2
Carburetor 7
Controls 12
Crankcase Cover/Sump 4
Crankshaft 2
Cylinder 2
Electric Starter . . . . . 18 & 19
Flywheel 15
Fuel Tank 11
Head/Valves 3
Intake Manifolds 4
Kit/Gaskets – Carburetor 6
Kit/Gaskets – Engine 6
Kit/Gaskets – Valves 6
Muffler . . . . . 9 & 10
Oil Group 5
Pistons 2
Rewind Starters 16
Shrouds 13

PRINTED IN U.S.A.

BRIGGS & STRATTON ®

COPYRIGHT by BRIGGS & STRATTON CORPORATION
All rights reserved. No part of this material may be reproduced or transmitted, in any form or by any means, electronic or mechanical, including photocopying, recording or by any information storage and retrieval system, without permission in writing from Briggs & Stratton Corporation.

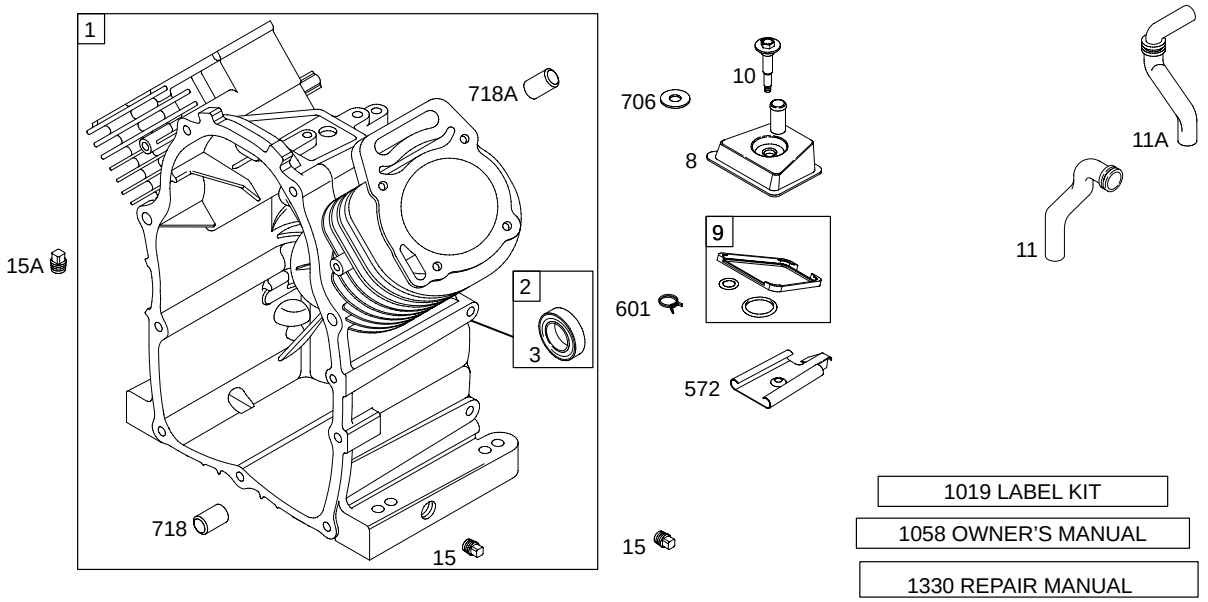

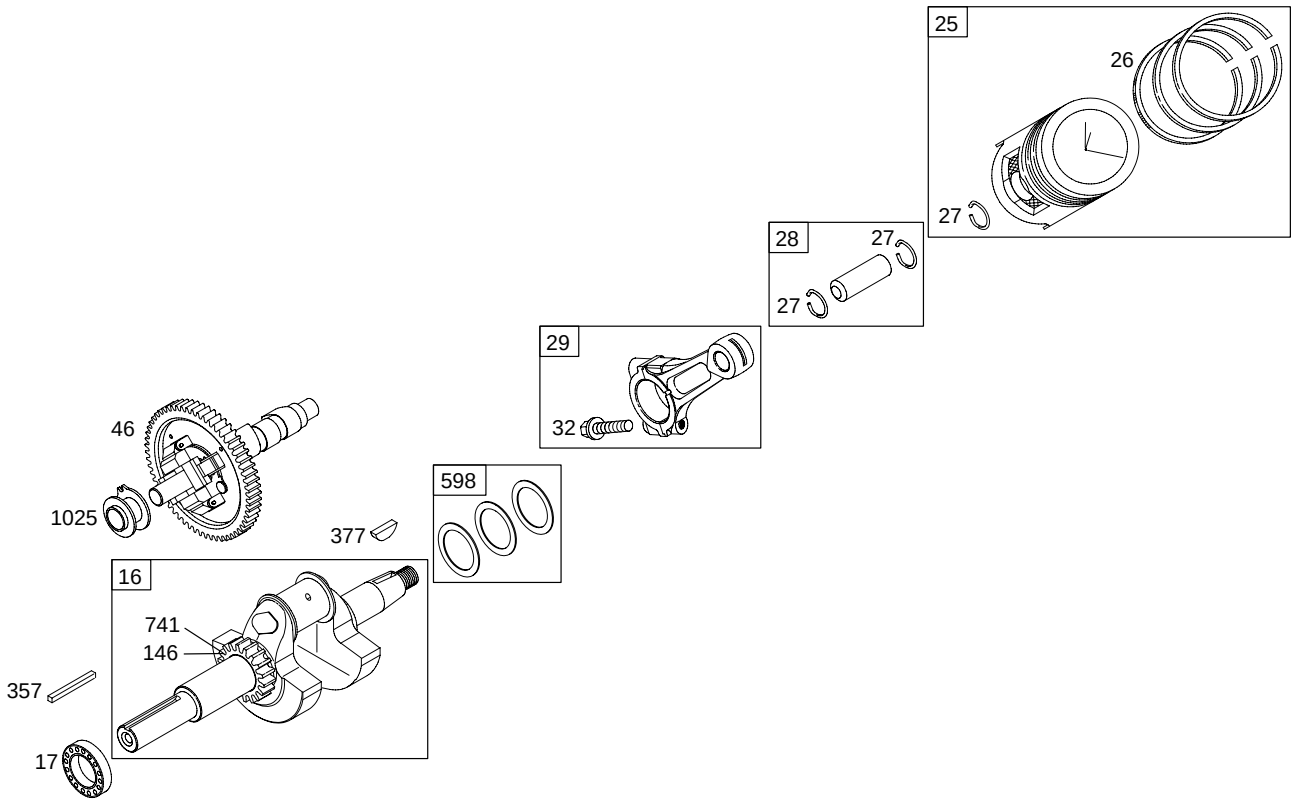

Illustrations cover a range of engines. Parts shown without corresponding text may not be used on your specific engine.

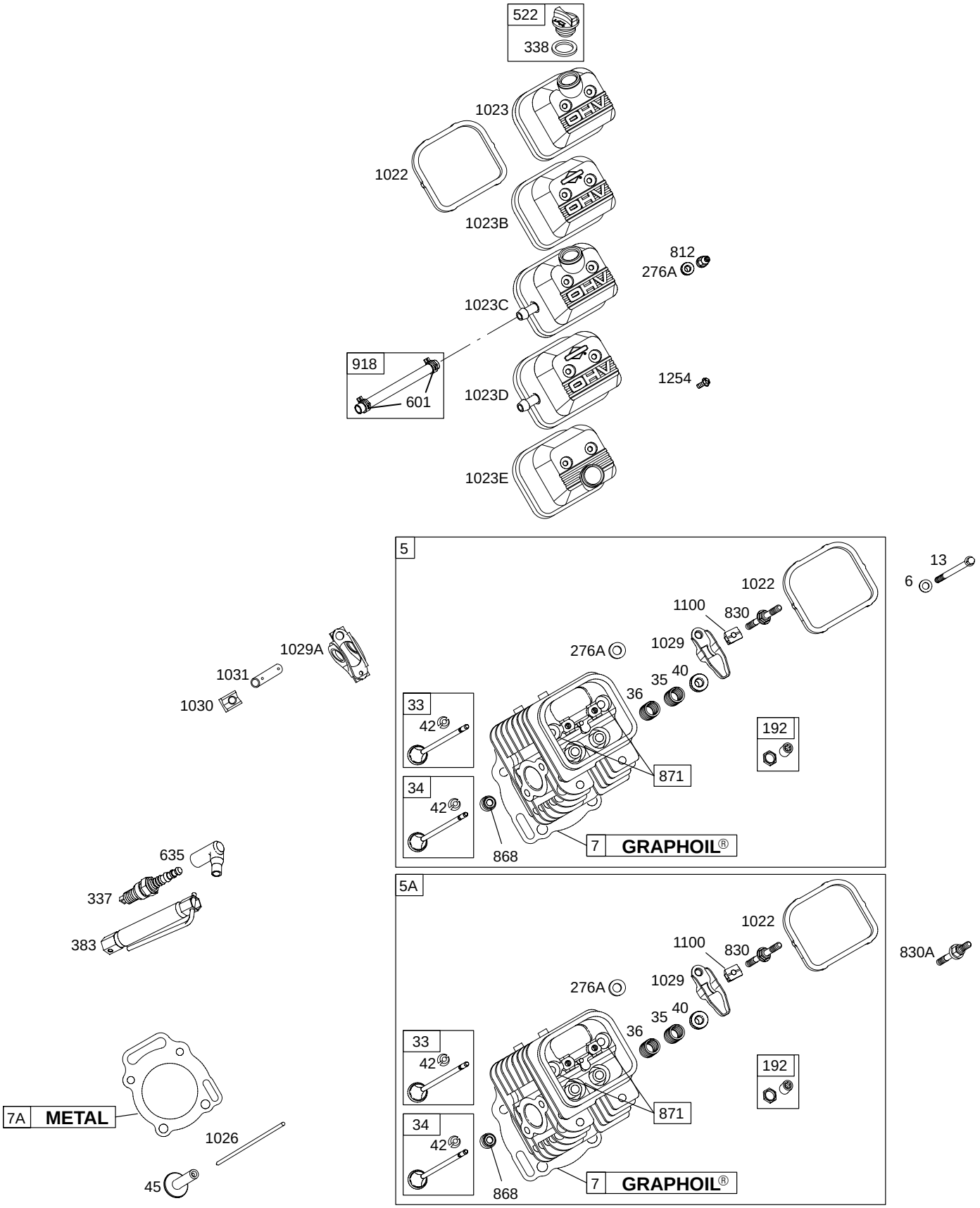

Illustrations cover a range of engines. Parts shown without corresponding text may not be used on your specific engine.

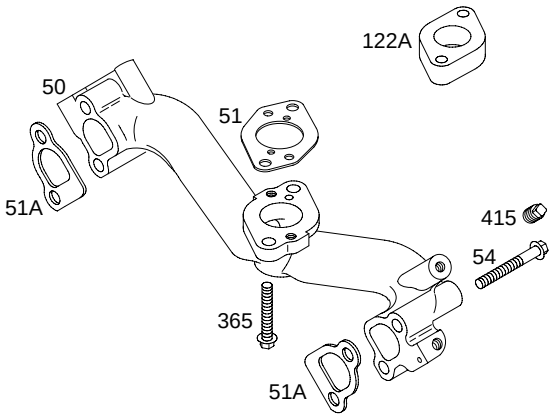
122A
50
51
51A
415
54
365
51A

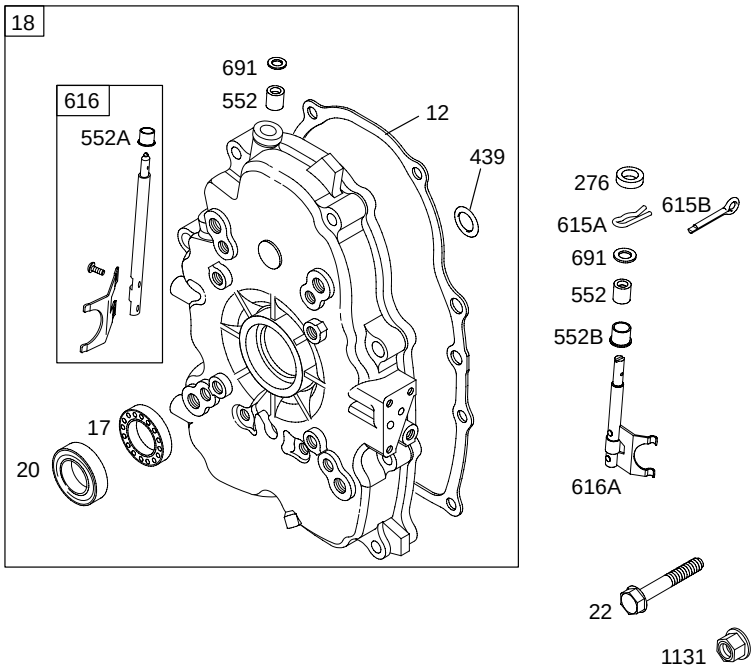
18
691
552
616
552A
12
439
17
20
276
615B
615A
691
552
552B
616A
22
1131

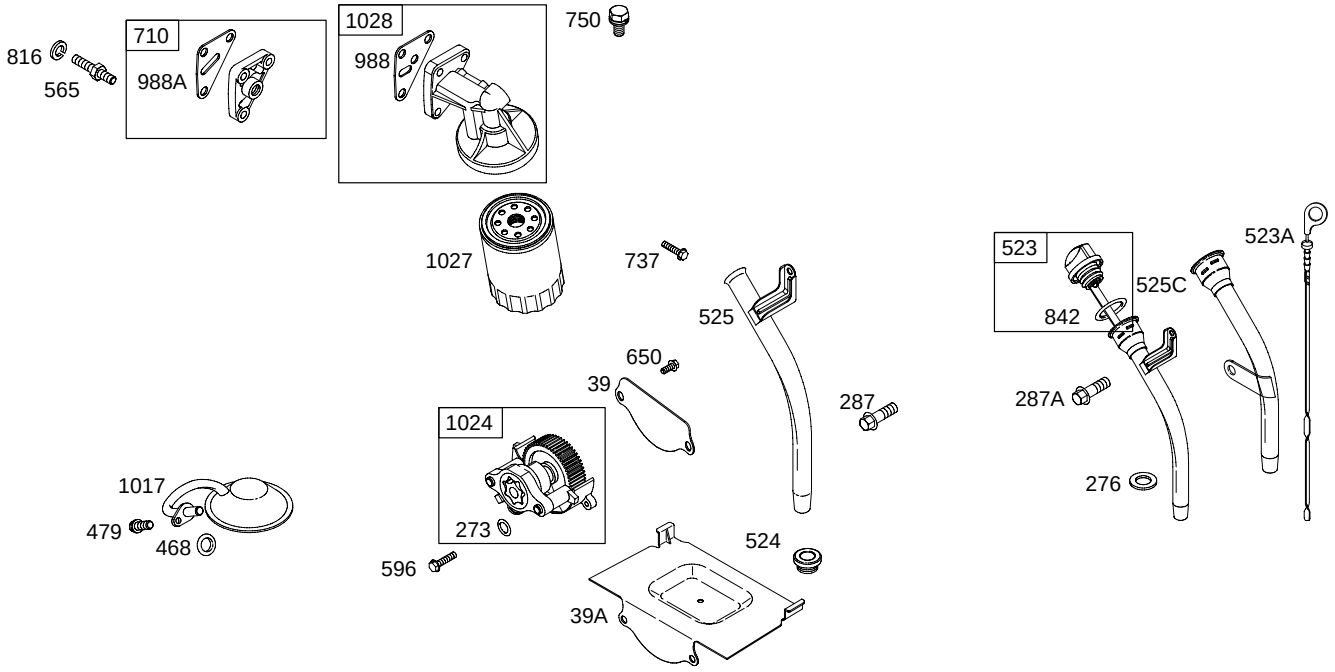

Illustrations cover a range of engines. Parts shown without corresponding text may not be used on your specific engine.

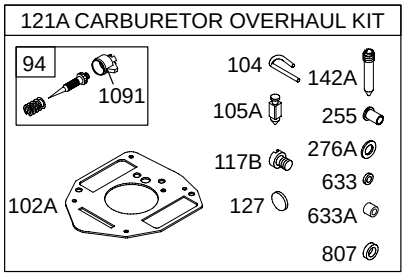

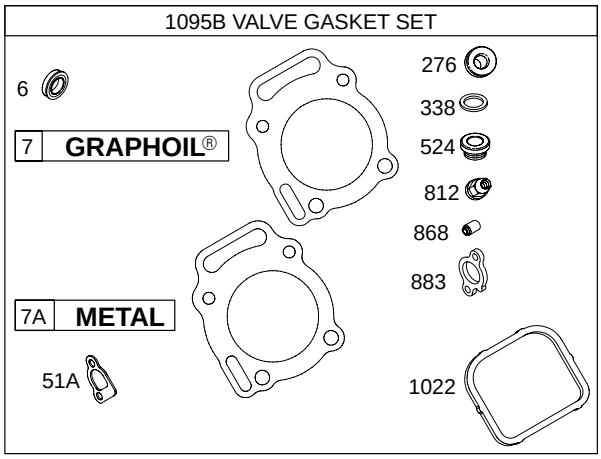

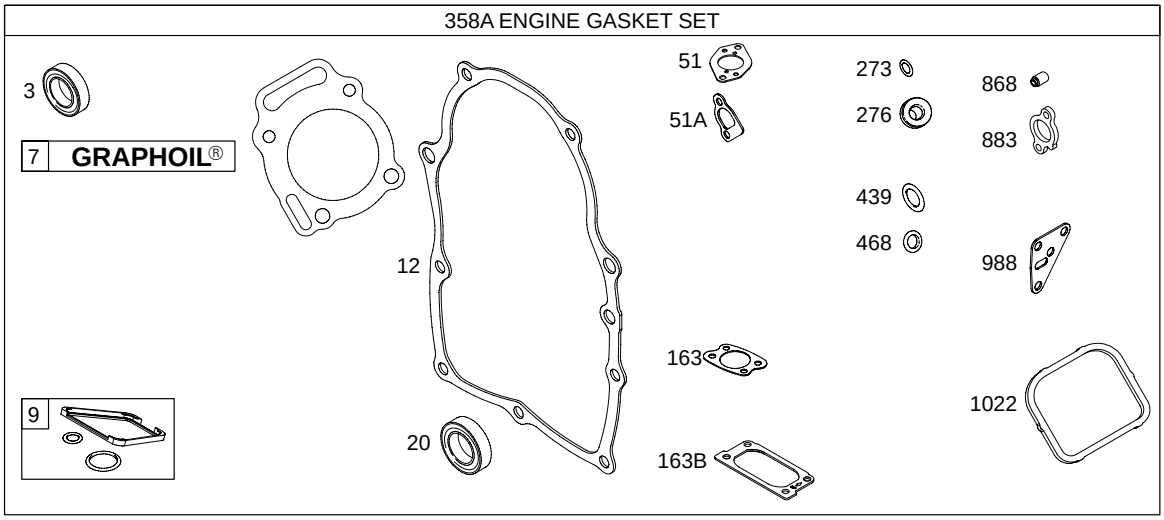

Illustrations cover a range of engines. Parts shown without corresponding text may not be used on your specific engine.

Assemblies include all parts shown in frames.

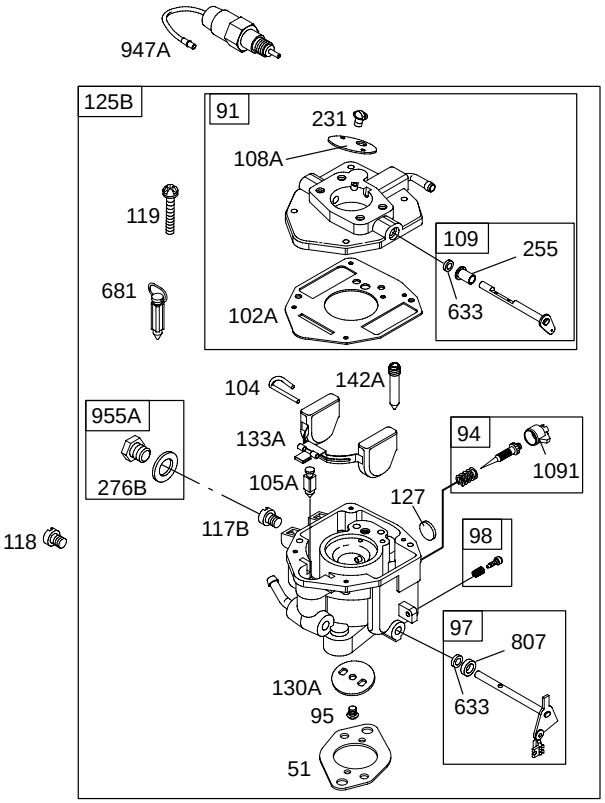

Illustrations cover a range of engines. Parts shown without corresponding text may not be used on your specific engine.

Assemblies include all parts shown in frames.

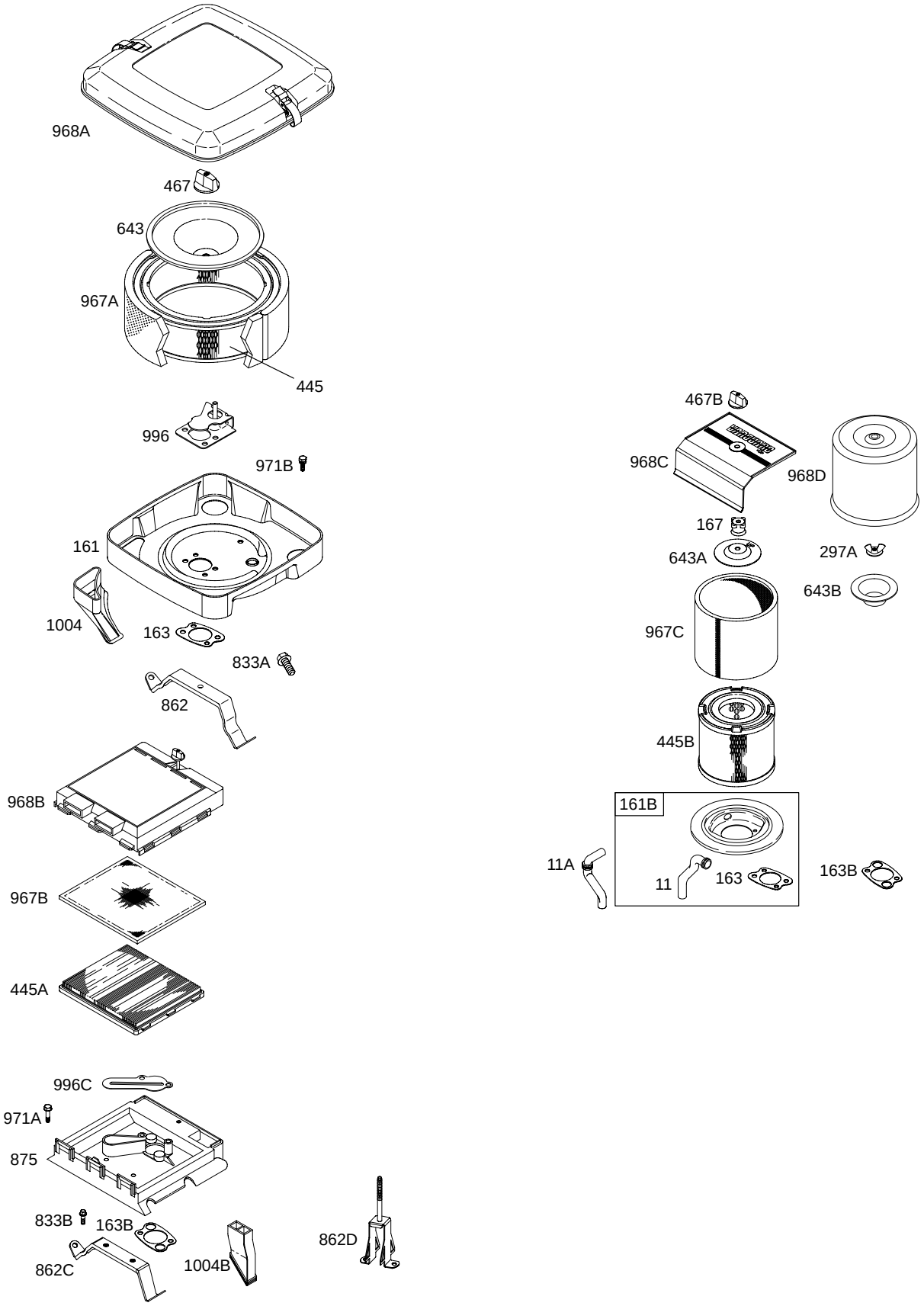

Illustrations cover a range of engines. Parts shown without corresponding text may not be used on your specific engine.

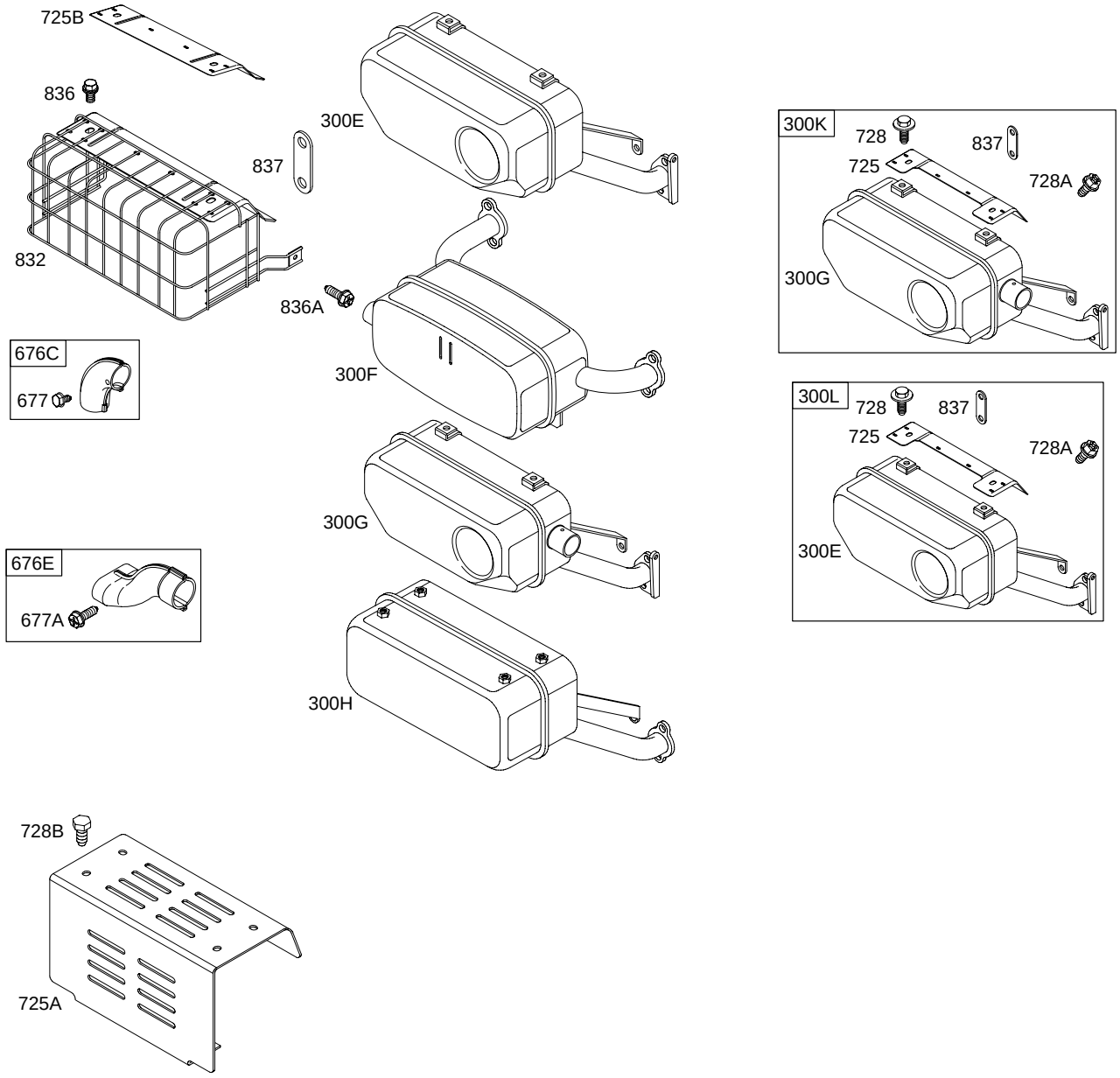
725B
836
832
837
300E
836A
300F
300G
300H
676C
677
676E
677A
728B
725A
300K
728
837
725
728A
300G
300L
728
837
725
728A
300E

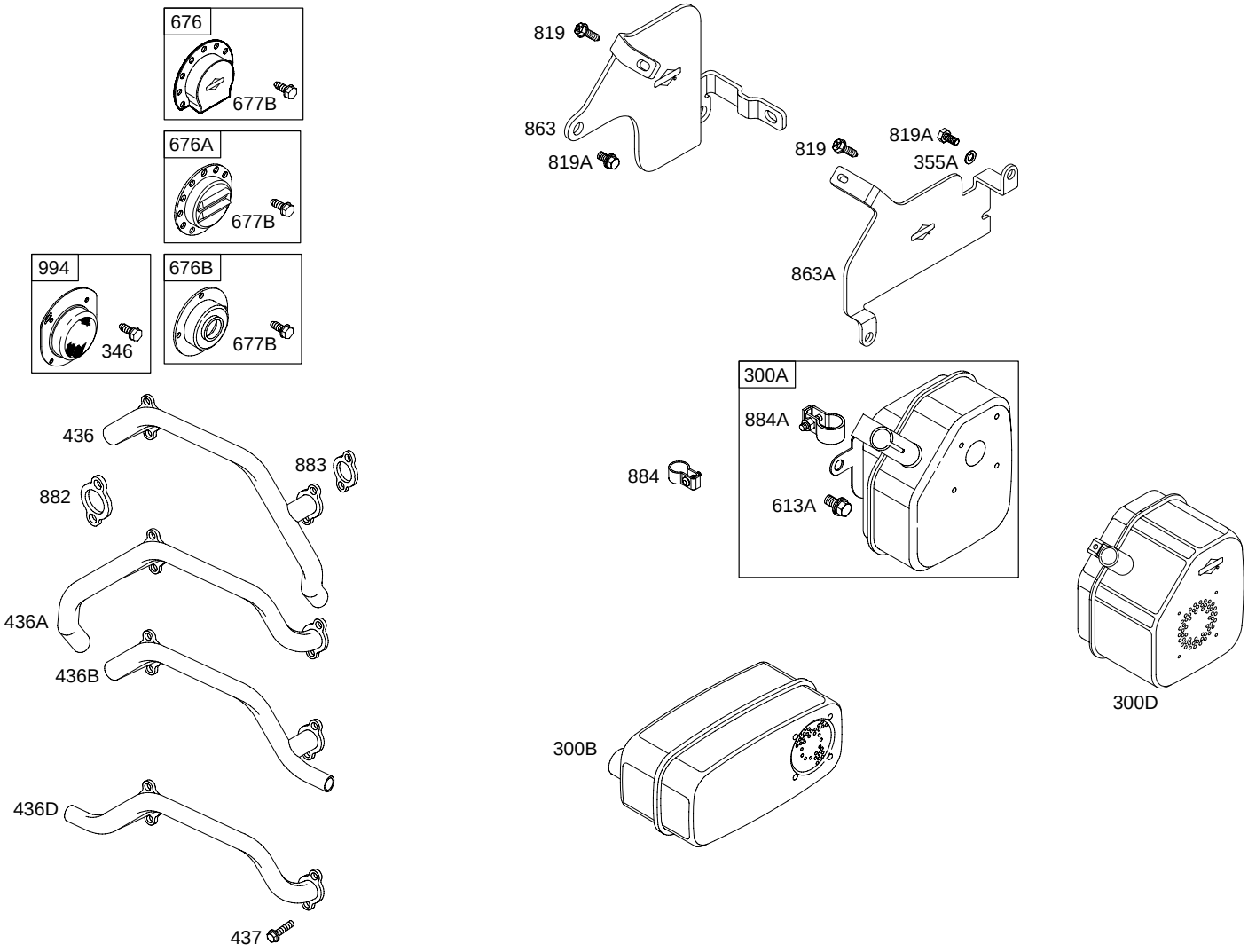

Illustrations cover a range of engines. Parts shown without corresponding text may not be used on your specific engine.

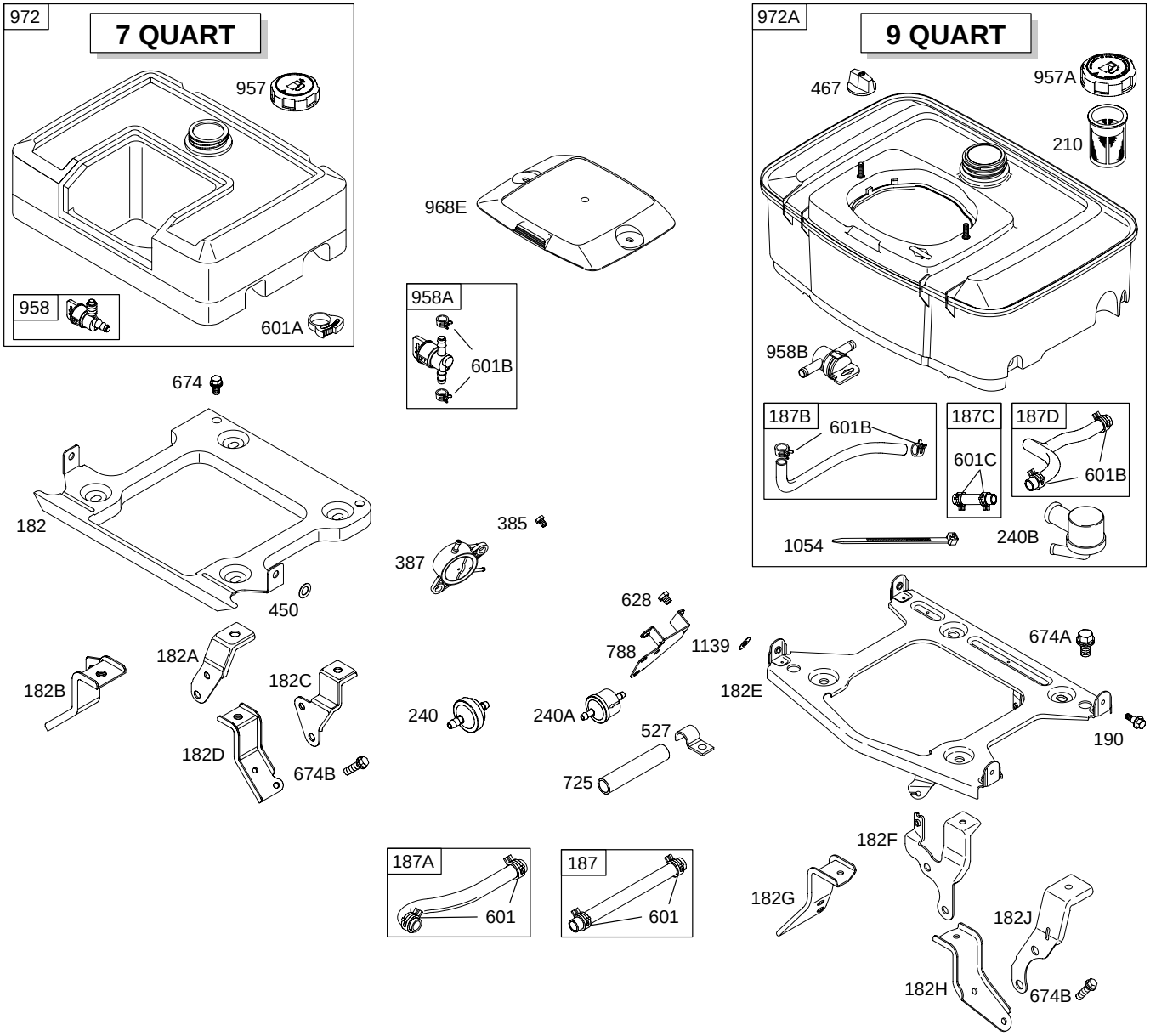

Illustrations cover a range of engines. Parts shown without corresponding text may not be used on your specific engine.

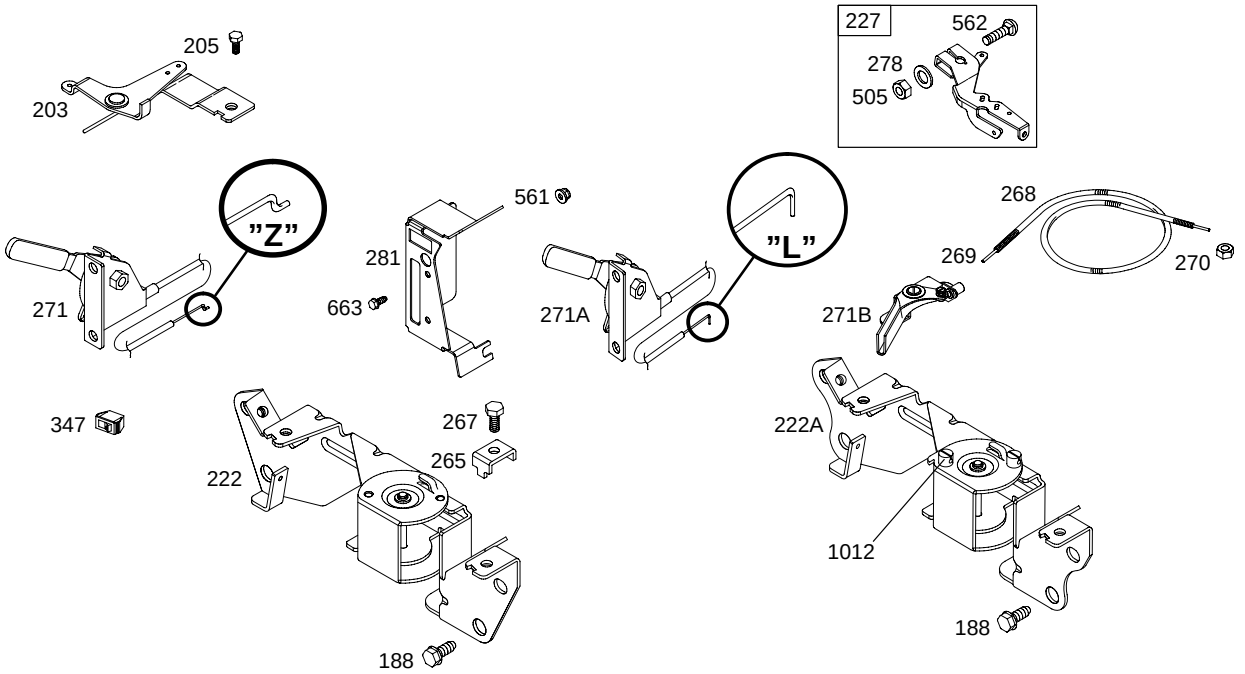

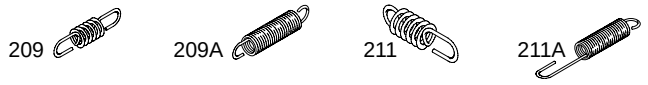

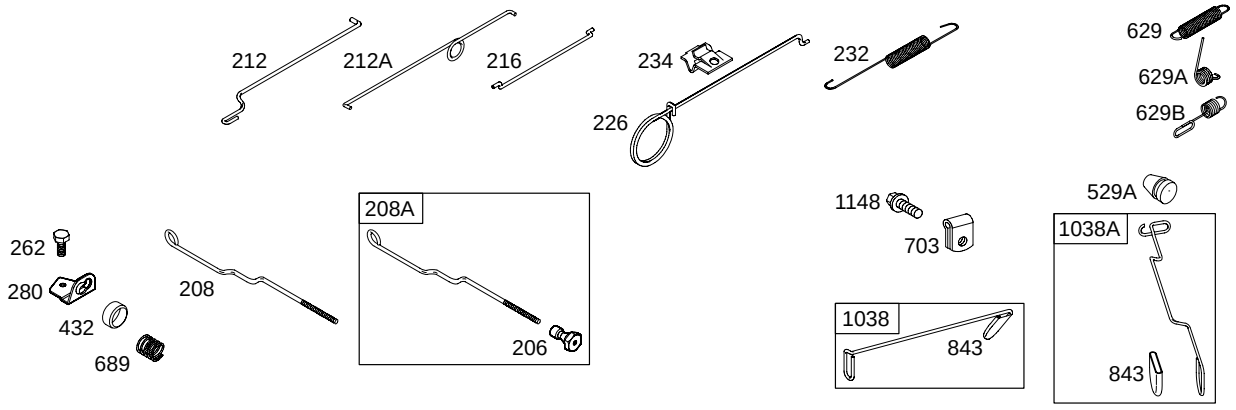

Illustrations cover a range of engines. Parts shown without corresponding text may not be used on your specific engine.

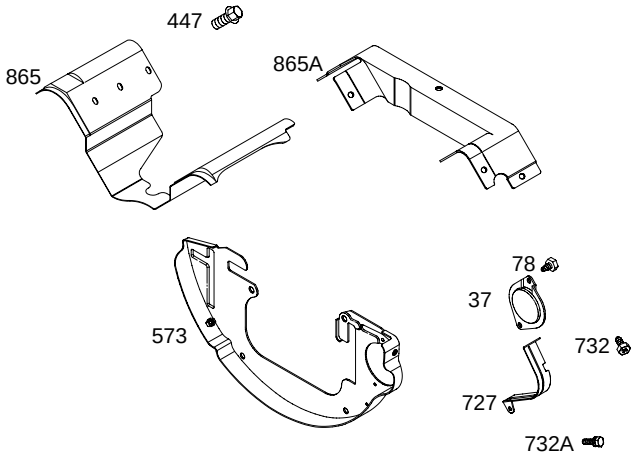

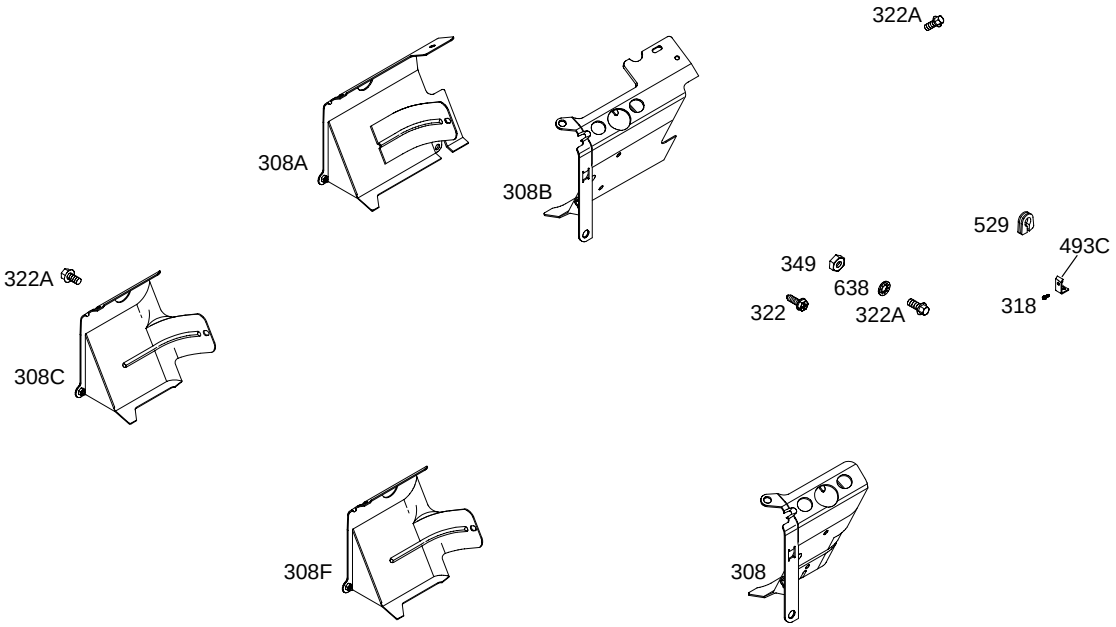

Illustrations cover a range of engines. Parts shown without corresponding text may not be used on your specific engine.

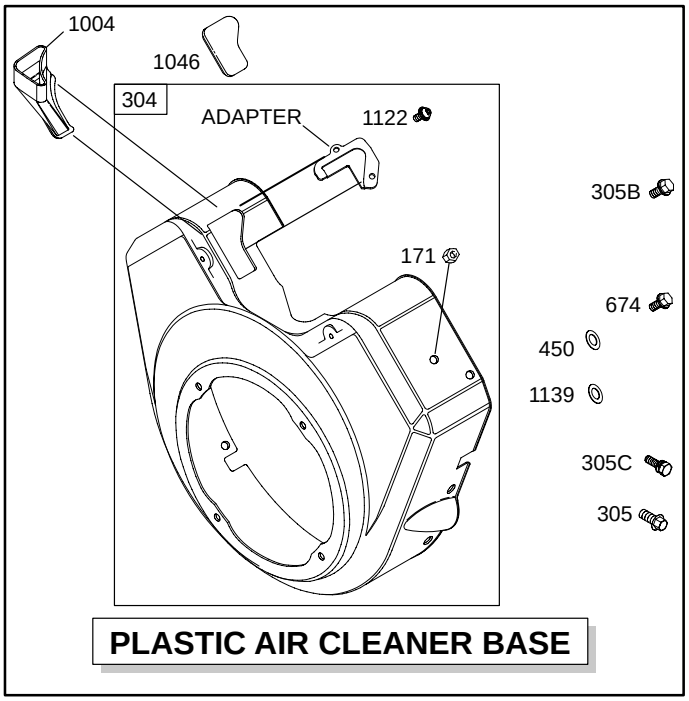

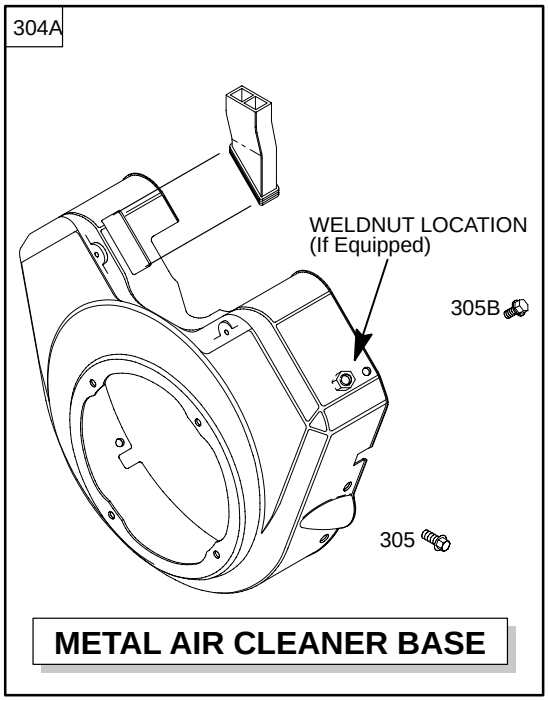

1036 EMISSION LABEL

Illustrations cover a range of engines. Parts shown without corresponding text may not be used on your specific engine.

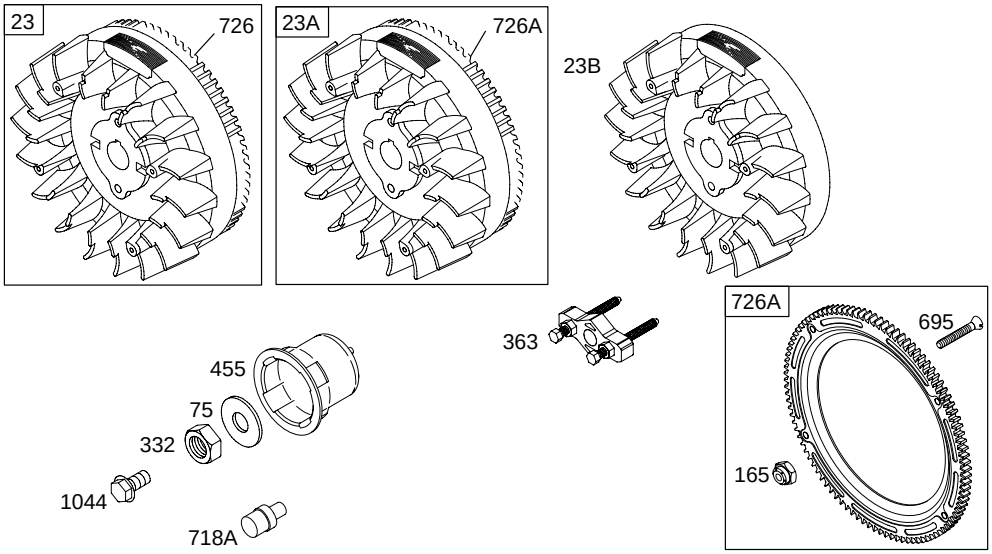

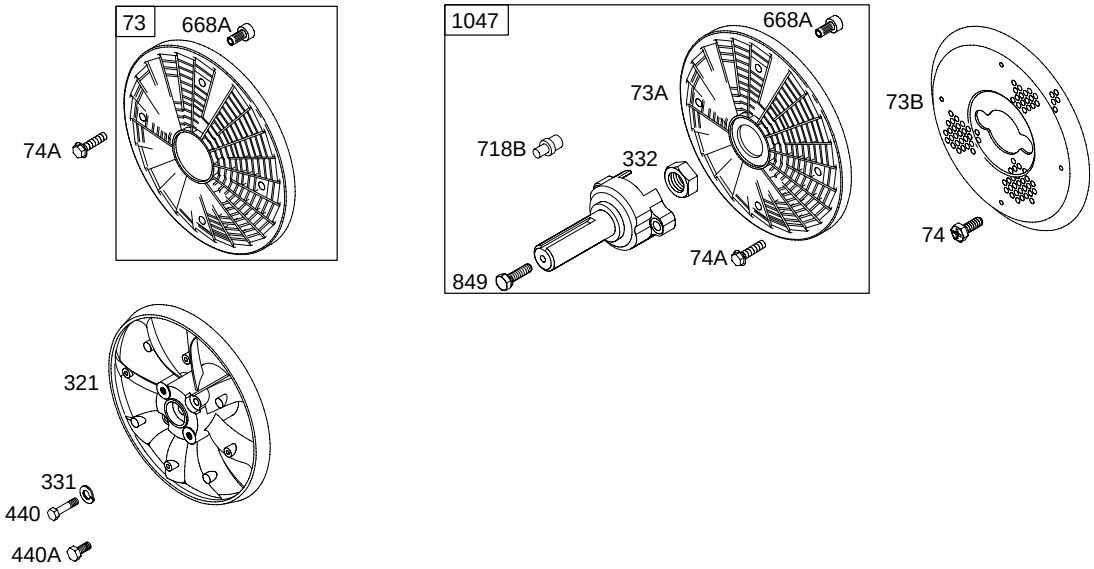

Illustrations cover a range of engines. Parts shown without corresponding text may not be used on your specific engine.

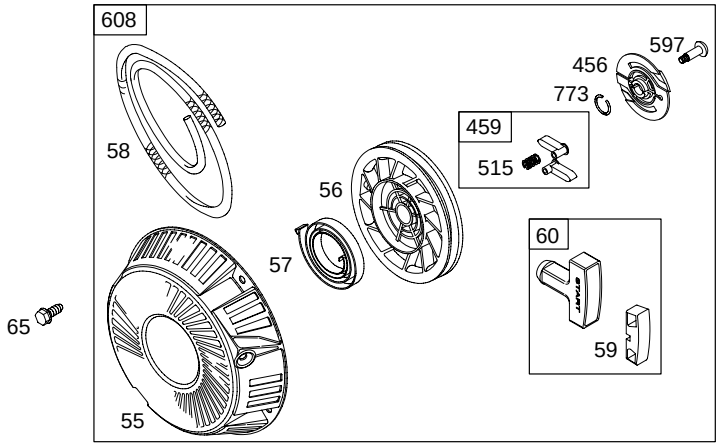
608
597
456
773
459
515
58
56
60
57
65
59
55

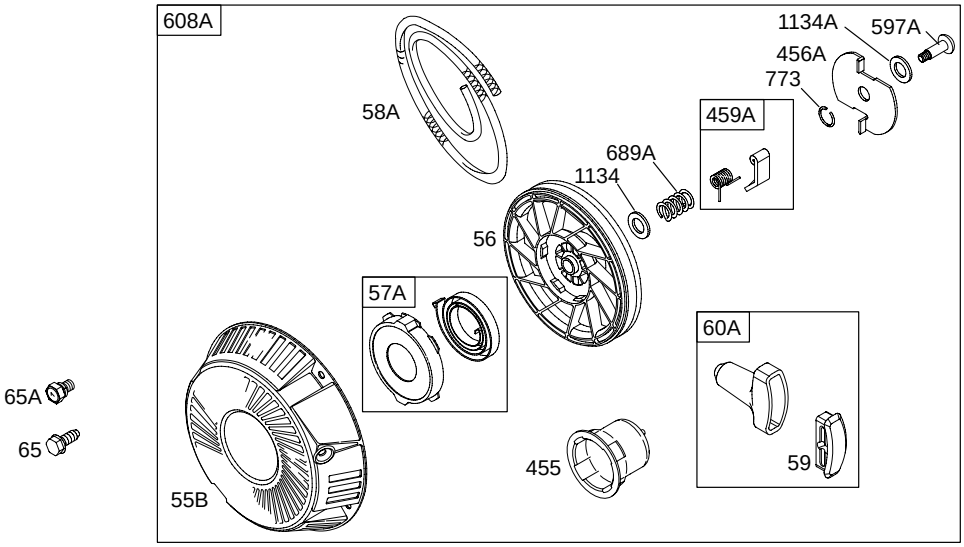
608A
1134A
597A
456A
773
58A
459A
689A
1134
56
57A
60A
65A
65
455
59
55B

DUAL CIRCUIT	5 – 9 AMP	TRI CIRCUIT	10 – 16 AMP	20 AMP
474B 877	474C 877B	474C 877B	474D 877C	474E 877D
878	578	878A	578	578
		526A 501A	526 501	526B 501B

NOTE: *All stators use a No. 1119 mounting screw.*

NOTE: *The proper flywheel part number and/or the alternator magnet size will determine the alternator type or output. See repair instruction manual for additional information.*

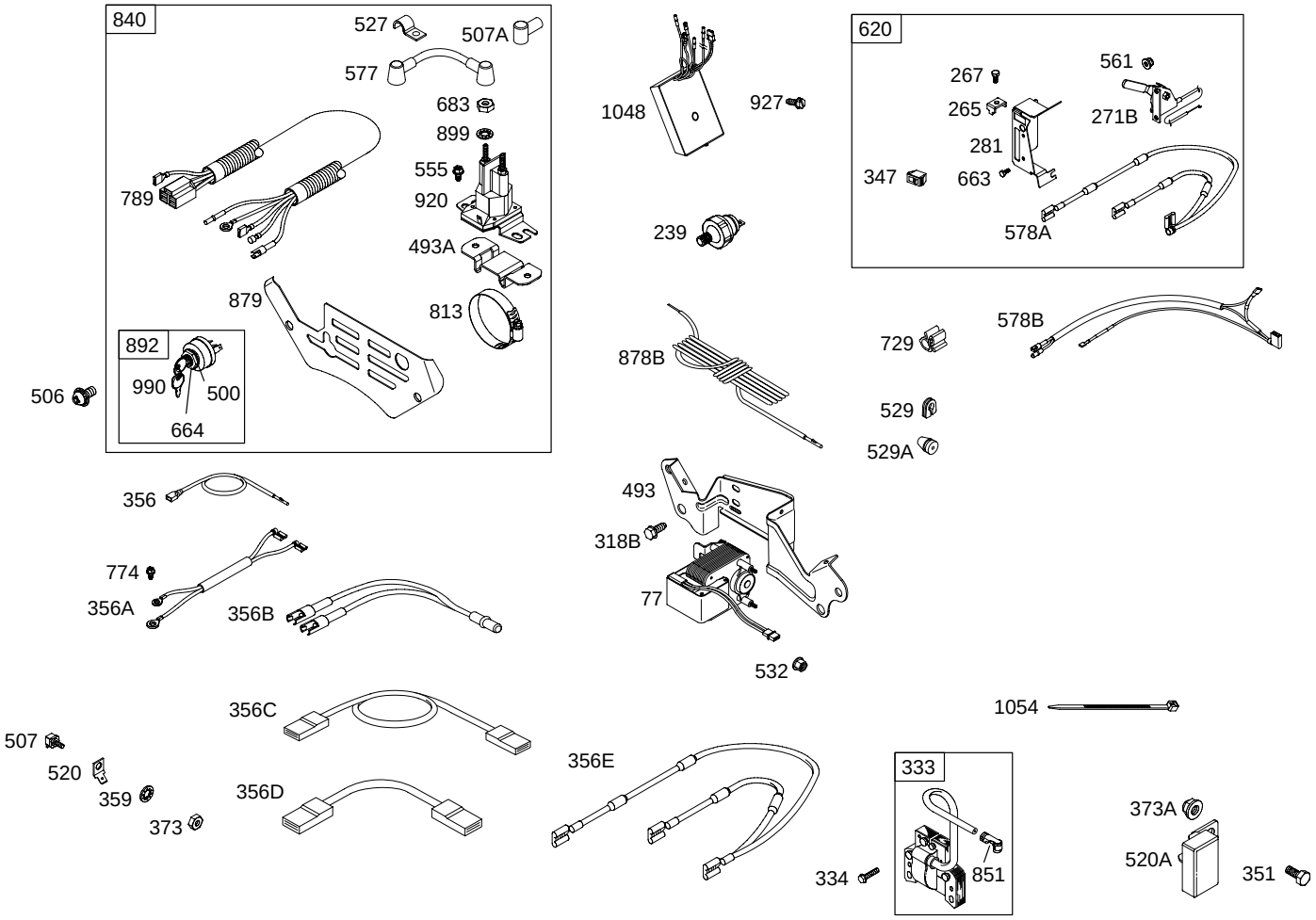

Illustrations cover a range of engines. Parts shown without corresponding text may not be used on your specific engine.

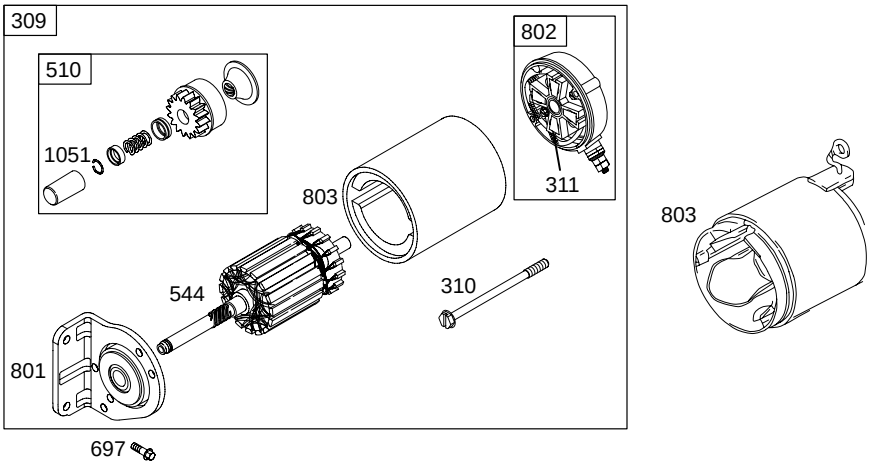

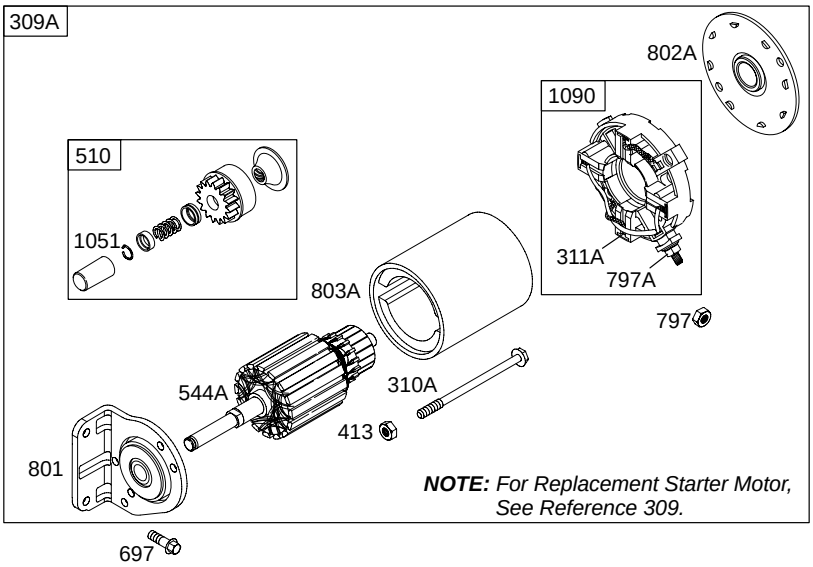

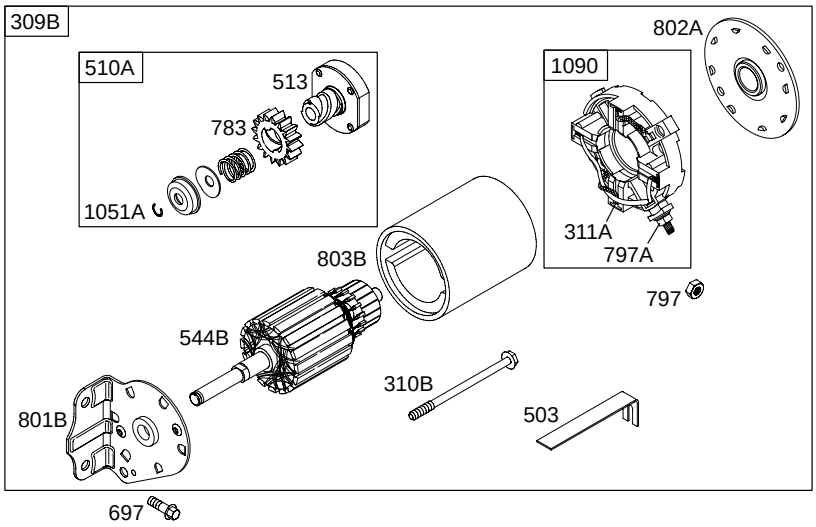

Illustrations cover a range of engines. Parts shown without corresponding text may not be used on your specific engine.

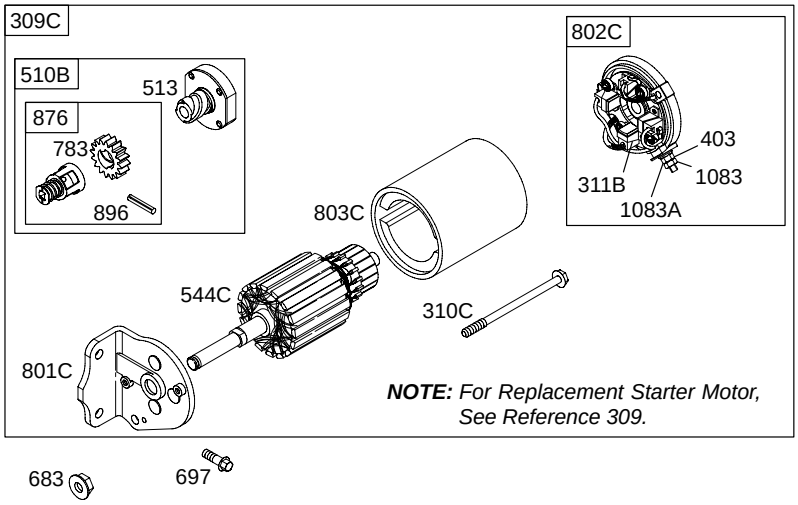
309C
510B
513
876
783
896
802C
403
311B
1083
1083A
803C
544C
310C
801C
NOTE: For Replacement Starter Motor, See Reference 309.
683
697

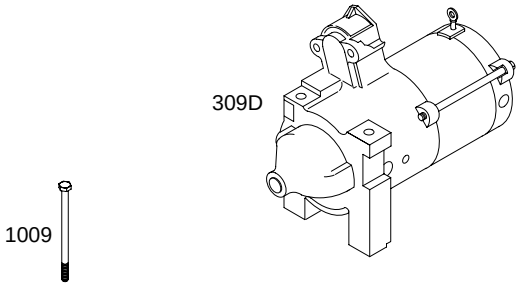
309D
1009

294400

REF. NO.	PART NO.	DESCRIPTION
1	692178	Cylinder Assembly (Used After Code Date 97043000). –––––– **Note** –––––– **807521** Cylinder Assembly (Used Before Code Date 97050100). **841081** Cylinder Assembly Used on Type No(s). 1222.
2	808534	Kit–Bushing/Seal (Magneto Side) (Used After Code Date 99043000). –––––– **Note** –––––– **807687** Kit–Bushing/Seal (Magneto Side) (Used Before Code Date 99050100).
3	★805101	Seal–Oil (Magneto Side)
5	809200	Head–Cylinder (Cylinder 1)
5A	809201	Head–Cylinder (Cylinder 2)
6	Δ805193	Washer (Cylinder Head) (Used Before Code Date 94050100).
7	★Δ806085	Gasket–Cylinder Head (Graphoil) (Used After Code Date 96033100).
7A	★Δ807986	Gasket–Cylinder Head (Metal) (Used Before Code Date 96040100).
8	808984	Breather Assembly
9	★809094	Gasket–Breather
10	690751	Screw (Breather Assembly) (Used After Code Date 90111400). –––––– **Note** –––––– **805194** Screw (Breather Assembly) (Used Before Code Date 90111500).
11	691556	Tube–Breather (Used After Code Date 96101000).
11A	806083	Tube–Breather (Used Before Code Date 96101100).
12	★691684	Gasket–Crankcase
13	692059	Screw (Cylinder Head)
15	690946	Plug–Oil Drain
15A	805059	Plug–Oil Drain
16	692161	Crankshaft (Used After Code Date 97043000). –––––– **Note** –––––– **807589** Crankshaft (Used Before Code Date 97050100). **692162** Crankshaft (Used After Code Date 97043000). Used on Type No(s). 1025, 1077. **807590** Crankshaft (Used Before Code Date 97050100). Used on Type No(s). 0325, 0377, 1025, 1077. **692163** Crankshaft (Used After Code Date 97043000). Used on Type No(s). 1018, 1019, 1029, 1042, 1059, 1074, 1078, 1115, 1123, 1124, 1126, 1127, 1129, 1133, 1134, 1135, 1138, 1148, 1161, 1165, 1170, 1171, 1172, 1183, 1185, 1187, 1195, 1199, 1204, 1210, 1212, 1219, 1236, 1238, 1254, 1256, 1257, 1258, 1259, 1267. **807745** Crankshaft (Used Before Code Date 97050100). Used on Type No(s). 0314, 0318, 0319, 0327, 0342, 0354, 0359, 0360, 0361, 0374, 0378, 0417, 0418, 0423, 0427, 0448, 0457, 0461, 1014, 1018, 1019, 1029, 1042, 1054, 1059, 1060, 1061, 1074, 1078, 1115, 1117, 1118, 1123, 1124, 1126, 1127, 1129, 1133, 1134, 1135, 1136, 1138, 1143, 1148, 1157, 1158, 1161, 1165, 1170, 1171, 1172, 1183, 1185, 1187, 1195, 1199, 1204, 1210, 1212, 1236, 1238. **692165** Crankshaft (Used After Code Date 97043000). Used on Type No(s). 1128, 1146, 1149, 1162, 1176, 1192, 1193, 1202, 1231. **807806** Crankshaft (Used Before Code Date 97050100). Used on Type No(s). 0428, 0449, 0462, 1128, 1146, 1149, 1162, 1176, 1192, 1193, 1202. **692166** Crankshaft (Used After Code Date 97043000). Used on Type No(s). 1211. **807849** Crankshaft (Used Before Code Date 97050100). Used on Type No(s). 1211.

★ Included in Engine Gasket Set–Ref. No. 358.
● Included in Carburetor Overhaul Kit–Ref. No. 121.
◆ Included in Carburetor Gasket Set–Ref. No. 977.
Δ Included in Valve Gasket Set–Ref. No. 1095.

Illustrations cover a range of engines. Parts shown without corresponding text may not be used on your specific engine.

REF. NO.	PART NO.	DESCRIPTION
17	**690752**	Bearing–Ball
18	**808847**	Cover–Crankcase (Used After Code Date 99072000).
		–––––– Note ––––––
		808850 Cover–Crankcase (Used After Code Date 99072000). Used on Type No(s). 1211.
		808506 Cover–Crankcase (Used Before Code Date 99072100). Used on Type No(s). 1211.
		808508 Cover–Crankcase Used on Type No(s). 0327, 1201, 1210, 1256, 1259.
20	**★805049**	Seal–Oil (PTO Side)
22	**692540**	Screw (Crankcase Cover/Sump)
23	**808766**	Flywheel (Steel Ring Gear)
		–––––– Note ––––––
		808774 Flywheel (Steel Ring Gear) Used on Type No(s). 0460, 1122, 1132, 1142, 1145, 1146, 1189, 1211, 1231, 1245, 1256, 1259, 1263.
		808770 Flywheel (Steel Ring Gear) Used on Type No(s). 1155, 1261.
23A	**690892**	Flywheel (Aluminum Ring Gear)
		–––––– Note ––––––
		690891 Flywheel (Aluminum Ring Gear) Used on Type No(s). 0422, 0428, 0432, 0449, 0460, 0462, 0480, 1113, 1128, 1132, 1146, 1149, 1162, 1189, 1192, 1193, 1211, 1231.
23B	**690889**	Flywheel (Rewind Starter)
25	**807619**	Piston Assembly (Standard)
		–––––– Note ––––––
		807807 Piston Assembly (.010” Oversize)
		807809 Piston Assembly (.020” Oversize)
		807811 Piston Assembly (.030” Oversize)
26	**807620**	Ring Set (Standard)
		–––––– Note ––––––
		807889 Ring Set (Standard) Used on Type No(s). 1219.
		807808 Ring Set (.010” Oversize)
		807810 Ring Set (.020” Oversize)
		807812 Ring Set (.030” Oversize)
27	**690683**	Lock–Piston Pin
28	**807621**	Pin–Piston (Standard)
29	**807900**	Rod–Connecting (Standard)
		–––––– Note ––––––
		807803 Rod–Connecting (.020” Undersize)
32	**690698**	Screw (Connecting Rod)
33	**807681**	Valve–Exhaust
34	**807680**	Valve–Intake
35	**692084**	Spring–Valve (Intake) (Used After Code Date 94011700).
36	**692084**	Spring–Valve (Exhaust) (Used After Code Date 94011700).
37	**690715**	Guard–Flywheel (Black)
		–––––– Note ––––––
		805504 Guard–Flywheel (Red)
39	**690745**	Deflecter–Oil
39A	**808821**	Deflecter–Oil
40	**692058**	Retainer–Valve
42	**807683**	Keeper–Valve
45	**690977**	Tappet–Valve
46	**691557**	Camshaft
		–––––– Note ––––––
		692157 Camshaft Used on Type No(s). 0327, 1201, 1210, 1256, 1259.
50	**690754**	Manifold–Intake
51	**★691694**	Gasket–Intake (Manifold To Carburetor)
51A	**★Δ692035**	Gasket–Intake (Manifold to Head)

★ Included in Engine Gasket Set–Ref. No. 358.
● Included in Carburetor Overhaul Kit–Ref. No. 121.
◆ Included in Carburetor Gasket Set–Ref. No. 977.
Δ Included in Valve Gasket Set–Ref. No. 1095.

Illustrations cover a range of engines. Parts shown without corresponding text may not be used on your specific engine.

294400

REF. NO.	PART NO.	DESCRIPTION
54	**690676**	Screw (Intake Manifold)
55	**691568**	Housing–Rewind Starter
55B	**492193**	Housing–Rewind Starter
56	**692085**	Pulley–Starter
57	**692086**	Spring–Rewind Starter
57A	**492194**	Spring–Rewind Starter
58	**66574**	Rope–Starter (Cut To Required Length)
58A	**695002**	Rope–Starter (Cut To Required Length)
59	**805957**	Insert–Grip
60	**808167**	Grip–Starter Rope
60A	**490652**	Grip–Starter Rope
65	**691982**	Screw (Rewind Starter)
65A	**841233**	Screw (Rewind Starter) (Used After Code Date 03120900).
		–––––– Note ––––––
		692539 Screw (Rewind Starter) (Used Before Code Date 03121000).
		807163 Screw (Rewind Starter)
73	**494439**	Screen–Rotating (Flush)
73A	**690749**	Screen–Rotating
73B	**690478**	Screen–Rotating
74	**691655**	Screw (Rotating Screen)
74A	**691647**	Screw (Rotating Screen)
75	**691490**	Washer (Flywheel)
77	**690819**	Motor–Servo
78	**690688**	Screw (Flywheel Guard)
91	**807919**	Body–Upper Carburetor (Used After Code Date 90113000).
		–––––– Note ––––––
		807721 Body–Upper Carburetor (Used Before Code Date 90120100).
94	**●808257**	Kit–Idle Mixture
95	**690718**	Screw (Throttle Valve)
97	**809007**	Shaft–Throttle
98	**808177**	Kit–Idle Speed
102A	**●692077**	Gasket–Carburetor Body
104	**●690723**	Pin–Float Hinge
105A	**●805620**	Valve–Float Needle (Gravity Feed)
108A	**690719**	Valve–Choke
109	**807722**	Shaft–Choke
		–––––– Note ––––––
		809096 Shaft–Choke Used on Type No(s). 1102, 1219, 1222, 1267, 1278.
117B	**●806652**	Jet–Main (Standard) (Used After Code Date 99033000).
		–––––– Note ––––––
		690861 Jet–Main (Standard) (Used After Code Date 94123100 and Before Code Date 99033100).
		805624 Jet–Main (Standard) (Used Before Code Date 95010100).
		690741 Jet–Main (Standard) Used on Type No(s). 0478, 1155, 1178, 1261.
118	**690741**	Jet–Main (High Altitude) (Used After Code Date 89111700).
		–––––– Note ––––––
		805537 Jet–Main (High Altitude) (Used Before Code Date 89111800).
119	**690720**	Screw (Upper To Lower Carburetor Body)
121A	**809021**	Kit–Carburetor Overhaul
		–––––– Note ––––––
		809020 Kit–Carburetor Overhaul (Used After Code Date 00073100). Used on Type No(s). 0478, 1155, 1178.

★ Included in Engine Gasket Set–Ref. No. 358.
● Included in Carburetor Overhaul Kit–Ref. No. 121.
◆ Included in Carburetor Gasket Set–Ref. No. 977.
Δ Included in Valve Gasket Set–Ref. No. 1095.

Illustrations cover a range of engines. Parts shown without corresponding text may not be used on your specific engine.

REF. NO.	PART NO.	DESCRIPTION
122A	**690691**	Spacer–Carburetor
125B	**809008**	Carburetor (Pump Feed) **–––––– Note ––––––** **809016** Carburetor (Pump Feed) Used on Type No(s). 0478, 1155, 1178, 1261. **809009** Carburetor (Pump Feed) (Used After Code Date 00073100). Used on Type No(s). 0414, 1028, 1064, 1100, 1110, 1114, 1145, 1175, 1196, 1205, 1252, 1271. **808295** Carburetor (Pump Feed) (Used Before Code Date 00080100). Used on Type No(s). 0414, 1028, 1064, 1100, 1110, 1114, 1145, 1175, 1196, 1200, 1205. **809015** Carburetor (Gravity Feed) (Used After Code Date 00073100). Used on Type No(s). 0460, 0481. **809010** Carburetor (Gravity Feed) Used on Type No(s). 1020, 1049, 1056, 1058, 1085, 1122, 1165, 1169, 1171, 1172, 1179, 1187, 1195, 1202, 1203, 1204, 1211, 1213, 1217, 1222, 1231, 1238, 1241, 1244, 1249, 1250, 1253, 1254.
127	**●690727**	Plug–Welch
130A	**690726**	Valve–Throttle
133A	**806961**	Float–Carburetor Used on Type No(s). 0481, 1018, 1019, 1025, 1026, 1042, 1046, 1074, 1075, 1077, 1102, 1123, 1135, 1146, 1161, 1176, 1197, 1200, 1219, 1220, 1245, 1246, 1247, 1255, 1256, 1257, 1258, 1259, 1263, 1267, 1271, 1278.
142A	**●690725**	Nozzle–Carburetor (Standard)
146	**691639**	Key–Timing
161	**691561**	Base–Air Cleaner (Metal) **–––––– Note ––––––** **690909** Base–Air Cleaner (Metal) Used on Type No(s). 0414, 0478, 1114, 1155, 1178.
161B	**808414**	Base–Air Cleaner (Metal)
163	**★692081**	Gasket–Air Cleaner
163B	**★692052**	Gasket–Air Cleaner
165	**693148**	Nut (Ring Gear)
167	**692297**	Seal–Air Cleaner Nut
171	**810056**	Nut (Air Cleaner)
182	**492317**	Bracket–Fuel Tank
182A	**690778**	Bracket–Fuel Tank
182B	**690779**	Bracket–Fuel Tank
182C	**690780**	Bracket–Fuel Tank
182D	**690781**	Bracket–Fuel Tank
182E	**691566**	Bracket–Fuel Tank
182F	**691520**	Bracket–Fuel Tank
182G	**691523**	Bracket–Fuel Tank
182H	**691524**	Bracket–Fuel Tank
182J	**691525**	Bracket–Fuel Tank
187	**691050**	Line–Fuel
187A	**691049**	Line–Fuel (Molded)
187B	**692107**	Line–Fuel
187C	**692106**	Line–Fuel
187D	**692108**	Line–Fuel
188	**692056**	Screw (Control Bracket)
190	**692199**	Screw (Fuel Tank)
192	**807623**	Adjuster–Rocker Arm
203	**690923**	Crank–Bell
205	**692083**	Screw (Bell Crank)
206	**691244**	Nut–Governor Adjusting (Used After Code Date 96033100).
208	**691549**	Rod–Governor Control (Used After Code Date 96033100).
208A	**808453**	Rod–Governor Control (Used Before Code Date 96040100).

★ Included in Engine Gasket Set–Ref. No. 358.
● Included in Carburetor Overhaul Kit–Ref. No. 121.
◆ Included in Carburetor Gasket Set–Ref. No. 977.
Δ Included in Valve Gasket Set–Ref. No. 1095.

Illustrations cover a range of engines. Parts shown without corresponding text may not be used on your specific engine.

294400

REF. NO.	PART NO.	DESCRIPTION
209	**692070**	Spring–Governor **––––––– Note –––––––** **691506** Spring–Governor Used on Type No(s). 0342, 0378, 0448, 1042, 1078, 1148, 1219, 1220, 1257, 1258, 1259. **691507** Spring–Governor Used on Type No(s). 0326, 0414, 0478, 1026, 1114, 1155, 1178, 1200. **690710** Spring–Governor Used on Type No(s). 0460, 0480, 0481, 1131, 1147. **692071** Spring–Governor Used on Type No(s). 0364, 1028, 1064, 1132, 1146, 1261. **691508** Spring–Governor Used on Type No(s). 0040, 0109, 0111, 0340, 0410, 0417, 0432, 0449, 1110, 1117, 1132, 1146, 1149, 1167, 1176, 1203, 1241, 1269. **692072** Spring–Governor Used on Type No(s). 0422, 0462, 1110, 1122, 1162, 1163, 1175, 1181, 1192, 1202, 1203, 1231, 1249, 1250, 1252. **691832** Spring–Governor Used on Type No(s). 0327, 1210.
209A	**690709**	Spring–Governor Used on Type No(s). 0314, 0318, 0319, 0354, 0359, 0360, 0361, 0374, 0417, 0418, 0423, 0427, 0457, 0461, 1014, 1018, 1019, 1029, 1054, 1059, 1060, 1061, 1074, 1115, 1117, 1118, 1123, 1124, 1126, 1127, 1129, 1133, 1134, 1135, 1136, 1138, 1143, 1157, 1158, 1161, 1165, 1170, 1171, 1172, 1183, 1185, 1187, 1195, 1199, 1204, 1211, 1212, 1236, 1238, 1267.
210	**691370**	Strainer–Fuel
211	**692069**	Spring–Governed Idle **––––––– Note –––––––** **692068** Spring–Governed Idle Used on Type No(s). 0342, 0378, 0448, 1042, 1078, 1148, 1257, 1258, 1259. **691505** Spring–Governed Idle Used on Type No(s). 0326, 0414, 1026, 1114, 1155, 1178. **691553** Spring–Governed Idle Used on Type No(s). 1261.
211A	**690707**	Spring–Governed Idle Used on Type No(s). 0314, 0318, 0319, 0354, 0359, 0360, 0361, 0374, 0417, 0418, 0423, 0427, 0457, 0461, 1014, 1018, 1019, 1029, 1054, 1059, 1060, 1061, 1074, 1115, 1117, 1118, 1123, 1124, 1126, 1127, 1129, 1133, 1134, 1135, 1136, 1138, 1143, 1157, 1158, 1161, 1165, 1170, 1171, 1172, 1183, 1185, 1187, 1195, 1199, 1204, 1211, 1212, 1236, 1238, 1267.
212	**690712**	Link–Throttle
212A	**691519**	Link–Throttle
216	**690705**	Link–Choke
222	**808454**	Bracket–Control (Used With Control Lever And/Or Wire With ”Z”” Formed End)

★ Included in Engine Gasket Set–Ref. No. 358.
● Included in Carburetor Overhaul Kit–Ref. No. 121.
◆ Included in Carburetor Gasket Set–Ref. No. 977.
Δ Included in Valve Gasket Set–Ref. No. 1095.

Illustrations cover a range of engines. Parts shown without corresponding text may not be used on your specific engine.

REF. NO.	PART NO.	DESCRIPTION
222A	**690918**	Bracket–Control (Used With Control Lever And/Or Wire With ”L”” Formed End) **–––––– Note ––––––** **691570** Bracket–Control (Used After Code Date 95043000). Used on Type No(s). 1114, 1155, 1178. **808014** Bracket–Control (Used With Control Lever And/Or Wire With ”L”” Formed End) (Used Before Code Date 95050100). Used on Type No(s). 0414, 0478, 1114, 1178.
226	**692075**	Rod–Hand Choke
227	**690236**	Lever–Governor Control
231	**692056**	Screw (Choke Valve)
232	**692073**	Spring–Governor Link
234	**691723**	Clip–Control Rod
239	**690233**	Switch–Oil Pressure
240	**298090**	Filter–Fuel
240A	**691035**	Filter–Fuel
240B	**808116**	Filter–Fuel
255	**●690721**	Bushing–Choke Shaft
262	**692083**	Screw (Rod Bracket)
265	**691024**	Clamp–Casing
267	**692083**	Screw (Casing Clamp)
268	**691025**	Casing–Control Wire (Cut To Required Length)
269	**691026**	Wire–Control (Cut To Required Length)
270	**691027**	Nut (Control Wire Casing)
271	**692541**	Lever–Control (Cable Wire With ”Z”” Formed End)
271A	**692105**	Lever–Control (Cable Wire With ”L” Formed End)
271B	**691028**	Lever–Control
273	**★690681**	Seal–O Ring (Oil Pump)
276	**★Δ690704**	Washer–Sealing (Governor Crank)
276A	**●807085**	Washer–Sealing (Used After Code Date 01120200). **–––––– Note ––––––** **691766** Washer–Sealing (Used Before Code Date 01120300).
276B	**690724**	Washer–Sealing (Carburetor Plug) Used on Type No(s). 0481, 1102, 1219, 1222, 1267, 1278.
278	**690237**	Washer (Governor Control Lever)
280	**691526**	Bracket–Rod
281	**690742**	Panel–Control
287	**692062**	Screw (Dipstick Tube) Used on Type No(s). 0481, 1219, 1222, 1267, 1272, 1278.
287A	**805177**	Screw (Dipstick Tube)(Standard Dipstick Tube) **–––––– Note ––––––** **806660** Screw (Dipstick Tube)(Special Dipstick Tube)
297A	**691331**	Nut (Air Filter Retainer)
300A	**807742**	Muffler (Used With Manifold Part Number **805142**)
300B	**498984**	Muffler Used on Type No(s). 1271.
300D	**692099**	Muffler (Lo Mount)
300E	**690906**	Muffler (Cylinder 1)(Side Outlet)
300F	**690931**	Muffler (Special High Mount)
300G	**691562**	Muffler (Cylinder 2)(Side Outlet)
300H	**807831**	Muffler (Cylinder 1)(Side Outlet)(Starter Motor Side)
300K	**808379**	Muffler (Cylinder 2)(Side Outlet)(Oil Filter Side)
300L	**808380**	Muffler (Cylinder 1)(Side Outlet)(Starter Motor Side)
304	**808408**	Housing–Blower (Black)(With Weld Nut)(For Metal Air Cleaner Base)

★ Included in Engine Gasket Set–Ref. No. 358.
● Included in Carburetor Overhaul Kit–Ref. No. 121.
◆ Included in Carburetor Gasket Set–Ref. No. 977.
Δ Included in Valve Gasket Set–Ref. No. 1095.

Illustrations cover a range of engines. Parts shown without corresponding text may not be used on your specific engine.

294400

REF. NO.	PART NO.	DESCRIPTION
304A	**807814**	Housing–Blower (Black)(Without Weld Nut)(For Plastic Air Cleaner Base) (Used After Code Date 90113000). Used on Type No(s). 0030, 0040, 0108, 0109, 0111, 0340, 0410, 0412.
		––––––– Note –––––––
		807662 Housing–Blower (Black)(With Weld Nut)(For Plastic Air Cleaner Base) (Used Before Code Date 90120100). Used on Type No(s). 0030, 0040, 0108, 0109, 0111, 0340, 0410, 0412.
		808055 Housing–Blower (Red)(Without Weld Nut)(For Plastic Air Cleaner Base) (Used After Code Date 90113000). Used on Type No(s). 0102.
		807654 Housing–Blower (Red)(With Weld Nut)(For Plastic Air Cleaner Base) (Used Before Code Date 90120100). Used on Type No(s). 0102.
305B	**692062**	Screw (Blower Housing)
		––––––– Note –––––––
		807163 Screw (Blower Housing)
308	**806547**	Cover–Cylinder Head (Used After Code Date 98120100).
		––––––– Note –––––––
		807868 Cover–Cylinder Head (Cylinder 1)(Black) (Used After Code Date 90111600 and Before Code Date 95071500).
		807656 Cover–Cylinder Head (Cylinder 1)(Black) (Used Before Code Date 90111700).
		806546 Cover–Cylinder Head (Cylinder 2)(Black) (Used Before Code Date 98113000). Used on Type No(s). 1219, 1267.
		841232 Cover–Cylinder Head (Cylinder 1)(Black) Used on Type No(s). 1222, 1278.
308A	**807869**	Cover–Cylinder Head (Cylinder 2)(Black) (Used After Code Date 90111600).
		––––––– Note –––––––
		807657 Cover–Cylinder Head (Cylinder 2)(Black) (Used Before Code Date 90111700).
		806544 Cover–Cylinder Head (Cylinder 2)(Black) Used on Type No(s). 1110, 1169, 1196, 1200, 1271.
308B	**806545**	Cover–Cylinder Head (Cylinder 1)(Black)
308C	**806544**	Cover–Cylinder Head (Cylinder 2)(Black)
308F	**841182**	Cover–Cylinder Head (Cylinder 2)(Black) Used on Type No(s). 0481, 1222, 1278.
309	**691564**	Motor–Starter (Services Aluminum Ring Gear Only)(For Replacement Starter Motor, SeeRef 309B)
309A	**BLANK**	Motor–Starter (For Replacement Starter Motor, Order Reference 309)
309B	**499521**	Motor–Starter (Services Aluminum Ring Gear Only)
309C		Motor–Starter (Services Aluminum Ring Gear Only)(For Replacement See Reference 309)
309D	**808817**	Motor–Starter Used on Type No(s). 1222, 1223.
310	**496880**	Screw (Starter Motor)(4 1/4” Long)
310A	**690323**	Screw (Starter Motor)(4 7/16” Long)
310B	**691263**	Screw (Starter Motor)(4 13/16” Long)
310C	**692329**	Screw (Starter Motor)(5–3/8” Long)
311	**496887**	Brush Set
311A	**497608**	Brush Set
311B	**490311**	Brush Set (4 9/16” Housing Length)

★ Included in Engine Gasket Set–Ref. No. 358.
● Included in Carburetor Overhaul Kit–Ref. No. 121.
◆ Included in Carburetor Gasket Set–Ref. No. 977.
∆ Included in Valve Gasket Set–Ref. No. 1095.

Illustrations cover a range of engines. Parts shown without corresponding text may not be used on your specific engine.

REF. NO.	PART NO.	DESCRIPTION
318	**841233**	Screw (Mounting Bracket) (Used After Code Date 03120900).
		–––––– Note ––––––
		692539 Screw (Mounting Bracket) (Used Before Code Date 03121000).
		690932 Screw (Mounting Bracket)
318B	**807163**	Screw (Mounting Bracket)
321	**690379**	Fan–Booster
322	**841233**	Screw (Cylinder Head Cover) (Used After Code Date 03120900).
		–––––– Note ––––––
		692539 Screw (Cylinder Head Cover) (Used Before Code Date 03121000).
		807163 Screw (Cylinder Head Cover)
322A	**692067**	Screw (Cylinder Head Cover)
331	**691075**	Washer (Booster Fan)
332	**690887**	Nut (Flywheel)
333	**492341**	Armature–Magneto
334	**692066**	Screw (Magneto Armature)
337	**491055**	Plug–Spark
		–––––– Note ––––––
		496018 Plug–Spark Used on Type No(s). 1155.
338	**★Δ691312**	Gasket–Dipstick
346	**690661**	Screw (Spark Arrestor)
347	**691995**	Switch–Rocker
349	**690238**	Nut (Cylinder Head Cover)
351	**692083**	Screw (Ground Terminal)
355A	**690944**	Washer (Muffler Bracket)
356	**690796**	Wire–Stop
356A	**690809**	Wire–Stop (2 Wires, 10–3/4", And 12–1/2" Long, Connected By ShrinkTube)(Insulated Flag Female Blade Terminal,A
356B	**692961**	Wire–Stop Used on Type No(s). 1256, 1259.
356C	**807593**	Wire–Stop (Cylinder 1) (Used Before Code Date 90120200).
356D	**807594**	Wire–Stop (Cylinder 2) (Used Before Code Date 90120200).
356E	**691999**	Wire–Stop (Ignition Coil)
357	**691483**	Key–Drive Pulley
358A	**808390**	Gasket Set–Engine
359	**691077**	Washer (Ground Terminal)
363	**19203**	Puller–Flywheel
365	**690711**	Screw (Carburetor)
373	**691612**	Nut (Ground Terminal)
373A	**690713**	Nut (Ground Terminal)
377	**808095**	Key–Woodruff
383	**19374**	Wrench–Spark Plug
385	**807084**	Screw (Fuel Pump)
387	**808656**	Pump–Fuel
403	**690288**	Washer (End Cap)
413	**693587**	Nut (Starter Motor)
415	**690283**	Plug
432	**691509**	Cap–Spring
436	**692061**	Manifold–Exhaust (Used With Muffler 807742)
436A	**691499**	Manifold–Exhaust (Cylinder 2)(Side Outlet)
436B	**691501**	Manifold–Exhaust (Used With Muffler Supplied By Customer)
436D	**691502**	Manifold–Exhaust Used on Type No(s). 1271.
437	**691902**	Screw (Exhaust Manifold)
439	**★692154**	Seal–O Ring (Crankcase Cover/Sump) (Used After Code Date 97043000).
		–––––– Note ––––––
		805198 Seal–O Ring (Crankcase Cover/Sump) (Used Before Code Date 97050100).
440	**690335**	Screw (Booster Fan)
440A	**690342**	Screw (Booster Fan)
445	**394018**	Filter–Air Cleaner Cartridge
445A	**805113**	Filter–Air Cleaner Cartridge
445B	**393957**	Filter–Air Cleaner Cartridge
447	**841233**	Screw (Air Guide Cover) (Used After Code Date 03120900).
		–––––– Note ––––––
		692539 Screw (Air Guide Cover) (Used Before Code Date 03121000).
		807163 Screw (Air Guide Cover)
450	**806497**	Washer (Fuel Tank Bracket)
455	**691517**	Cup–Flywheel (Used After Code Date 93072500).
		–––––– Note ––––––
		805153 Cup–Flywheel (Used Before Code Date 93072600).

★ Included in Engine Gasket Set–Ref. No. 358.
● Included in Carburetor Overhaul Kit–Ref. No. 121.
◆ Included in Carburetor Gasket Set–Ref. No. 977.
Δ Included in Valve Gasket Set–Ref. No. 1095.

Illustrations cover a range of engines. Parts shown without corresponding text may not be used on your specific engine.

294400

REF. NO.	PART NO.	DESCRIPTION
456	**691529**	Plate–Pawl Friction
456A	**224228**	Plate–Pawl Friction
459	**808166**	Pawl–Ratchet
459A	**492431**	Pawl–Ratchet
467	**691985**	Knob–Air Cleaner
467B	**691668**	Knob–Air Cleaner
468	**★690690**	Seal–O Ring (Oil Pump Screen)
474B	**696459**	Alternator (Dual Circuit)
474C	**696457**	Alternator (5 To 9 Amp Regulated) **–––––– Note ––––––** **698013** Alternator (10 Amp Circuit) Used on Type No(s). 1222, 1278.
474D	**696458**	Alternator (10–16 Amp Regulated)
474E	**696579**	Alternator (20 Amp) Used on Type No(s). 1155, 1261.
479	**807084**	Screw (Oil Pump Screen)
493	**691518**	Bracket–Mounting
493A	**691177**	Bracket–Mounting (Solenoid)
493C	**691503**	Bracket–Mounting
500	**691086**	Washer (Key Switch)
501	**691185**	Regulator
501A	**691188**	Regulator
501B	**691573**	Regulator Used on Type No(s). 1155, 1261.
503	**691532**	Strap–Starter
505	**690238**	Nut (Governor Control Lever)
506	**690677**	Screw (Carburetor Cover)
507	**281223**	Insulator
507A	**691972**	Insulator
510	**496881**	Drive–Starter (Services Aluminum Ring Gear Only)(For Replacement Starter Motor, SeeRef 309B)
510A	**696541**	Drive–Starter
510B	**696540**	Drive–Starter
513	**692024**	Clutch–Drive
515	**691528**	Spring–Pawl
520	**691084**	Terminal–Ground
520A	**809077**	Terminal–Ground (Used Before Code Date 90120200).
522	**491832**	Plug–Dipstick/Fill
523	**692100**	Dipstick (Standard)
523A	**693175**	Dipstick (Special)
524	**∆693172**	Seal–Dipstick Tube (Used After Code Date 98053100). **–––––– Note ––––––** **281370** Seal–Dipstick Tube (Used Before Code Date 98060100).
525	**693174**	Tube–Dipstick (Special)
525C	**690897**	Tube–Dipstick (Standard) (Standard) Used on Type No(s). 0445, 1145.
526	**692067**	Screw (Regulator)(10–16 Amp Regulated)
526A	**690717**	Screw (Regulator)(5 To 9 Amp Regulated)
526B	**691547**	Screw (Regulator) Used on Type No(s). 1155, 1261.
527	**690423**	Clamp–Tube
529	**690744**	Grommet
529A	**691527**	Grommet
532	**691115**	Nut (Mounting Bracket)
544	**690855**	Armature–Starter **–––––– Note ––––––** **809139** Armature–Starter Used on Type No(s). 1223.
544A	**693548**	Armature–Starter
544B		Armature–Starter
544C	**490309**	Armature–Starter (4–3/8” Housing Length)
552	**690701**	Bushing–Governor Crank (Output End)
552A	**806686**	Bushing–Governor Crank (Flanged) (Used After Code Date 99072000).
552B	**690702**	Bushing–Governor Crank (Flanged) (Used Before Code Date 99072100).
555	**692067**	Screw (Starter Solonoid)
561	**690713**	Nut (Control Lever)
562	**690239**	Bolt (Governor Control Lever)
565	**690682**	Stud (Oil Filter Adapter)
572	**690686**	Baffle–Breather

★ Included in Engine Gasket Set–Ref. No. 358.
● Included in Carburetor Overhaul Kit–Ref. No. 121.
◆ Included in Carburetor Gasket Set–Ref. No. 977.
∆ Included in Valve Gasket Set–Ref. No. 1095.

Illustrations cover a range of engines. Parts shown without corresponding text may not be used on your specific engine.

REF. NO.	PART NO.	DESCRIPTION
573	**841310**	Plate–Back
		–––––– Note ––––––
		693045 Plate–Back Used on Type No(s). 1223.
		841127 Plate–Back Used on Type No(s). 1222.
577	**690795**	Cable–Starter
578	**692306**	Wire Assembly (1 Wire, 48–1/2" Long)(Snap Connect Female Pin Socket, And Bare WireEnd)
578A	**692319**	Wire Assembly
578B	**691377**	Wire Assembly
596	**691492**	Screw (Oil Pump)
597	**690876**	Screw (Pawl Friction Plate)
597A	**94463**	Screw (Pawl Friction Plate)
598	**807625**	Shim–End Play (Crankshaft)
601	**691038**	Clamp–Hose
601A	**805813**	Clamp–Hose
601B	**95162**	Clamp–Hose
601C	**691522**	Clamp–Hose
608	**692102**	Starter–Rewind (Used After Code Date 93072500).
608A	**808152**	Starter–Rewind (Used Before Code Date 93072600).
613A	**692056**	Screw (Muffler)
		–––––– Note ––––––
		692067 Screw (Muffler)
615A	**805417**	Retainer–Governor Shaft
615B	**691550**	Retainer–Governor Shaft Used on Type No(s). 0460, 0481, 1018, 1019, 1020, 1026, 1042, 1046, 1049, 1056, 1064, 1074, 1075, 1077, 1085, 1100, 1102, 1110, 1122, 1123, 1135, 1146, 1155, 1161, 1165, 1169, 1171, 1175, 1176, 1195, 1219, 1220, 1222, 1231, 1238, 1241, 1245, 1246, 1247, 1249, 1250, 1252, 1253, 1254, 1255, 1257, 1258, 1261, 1263, 1267, 1278.
616	**806685**	Crank–Governor (Used After Code Date 99072000).
616A	**690899**	Crank–Governor (Used Before Code Date 99072100).
620	**494052**	Panel–Speed Control
628	**806660**	Screw (Fuel Pump Bracket)
629	**806717**	Spring–Throttle Return
629A	**806716**	Spring–Throttle Return
629B	**692088**	Spring–Throttle Return
633	**●806131**	Seal–Choke/Throttle Shaft
		–––––– Note ––––––
		690722 Seal–Choke/Throttle Shaft
633A	**●695414**	Seal–Choke/Throttle Shaft
635	**692076**	Boot–Spark Plug
638	**691551**	Washer (Cylinder Cover)
		–––––– Note ––––––
		690706 Washer (Cylinder Cover)
643	**692079**	Retainer–Air Filter
643A	**690447**	Retainer–Air Filter
643B	**691730**	Retainer–Air Filter
650	**841233**	Screw (Oil Deflector) (Used After Code Date 03120900).
		–––––– Note ––––––
		692539 Screw (Oil Deflector) (Used Before Code Date 03121000).
663	**692083**	Screw (Control Panel)
664	**691087**	Nut (Key Switch)
668A	**691500**	Spacer
674	**692056**	Screw (Fuel Tank Bracket)
674A	**94536**	Screw (Fuel Tank Bracket)
674B	**692062**	Screw (Fuel Tank Bracket)
676	**393761**	Deflector–Muffler (Side Out)
676A	**397630**	Deflector–Muffler (Louvered)
676B	**396903**	Deflector–Muffler (Direct Out)
676C	**495518**	Deflector–Muffler (90 Degree Outlet)
676E	**808393**	Deflector–Muffler
677	**810079**	Screw (Muffler Deflector)
677A	**690688**	Screw (Muffler Deflector)
677B	**690661**	Screw (Muffler Deflector)
681	**808798**	Kit–Needle/Seat Used on Type No(s). 1219, 1278.
683	**691029**	Nut (Starter Solenoid)
689	**691272**	Spring–Friction
689A	**262564**	Spring–Friction
691	**★690680**	Seal–Governor Shaft
695	**693109**	Screw (Ring Gear)

★ Included in Engine Gasket Set–Ref. No. 358.
● Included in Carburetor Overhaul Kit–Ref. No. 121.
◆ Included in Carburetor Gasket Set–Ref. No. 977.
Δ Included in Valve Gasket Set–Ref. No. 1095.

Illustrations cover a range of engines. Parts shown without corresponding text may not be used on your specific engine.

294400

REF. NO.	PART NO.	DESCRIPTION
697	**692062**	Screw (Drive Cap)
703	**94484**	Clip
706	**805484**	Washer (Breather Assembly) (Used Before Code Date 90111500).
710	**807689**	Cover–Oil Filter
718	**806469**	Pin–Locating
718A	**805102**	Pin–Locating (Used Before Code Date 90091100).
718B	**690740**	Pin–Locating
725	**280866**	Shield–Heat (Cut To Required Length)
725A	**805702**	Shield–Heat
725B	**691498**	Shield–Heat
726		Gear–Ring (Steel)(See Reference 23 for Service)
726A	**807805**	Gear–Ring (Aluminum)
727	**841313**	Cover–Starter Drive (Used After Code Date 03103100). **––––––– Note –––––––** **690714** Cover–Starter Drive (Black) (Used After Code Date 91031000 and Before Code Date 03110100). **805503** Cover–Starter Drive (Red) (Used Before Code Date 91031100).
728	**691514**	Screw (Heat Shield)
728A	**692067**	Screw (Heat Shield)
728B	**805704**	Screw (Heat Shield)
729	**690586**	Clip–Wire
732	**690688**	Screw (Starter Drive Cover) **––––––– Note –––––––** **807163** Screw (Starter Drive Cover)
732A	**841233**	Screw (Starter Drive Cover) (Used After Code Date 03120900). **––––––– Note –––––––** **692539** Screw (Starter Drive Cover) (Used Before Code Date 03121000).
737	**690679**	Screw (Oil Filter Adapter)
741	**805675**	Gear–Timing **––––––– Note –––––––** **691530** Gear–Timing (Used After Code Date 97043000). Used on Type No(s). 0481, 1018, 1019, 1029, 1042, 1059, 1074, 1115, 1123, 1124, 1126, 1127, 1133, 1135, 1138, 1148, 1161, 1165, 1170, 1171, 1172, 1183, 1187, 1195, 1199, 1204, 1210, 1212, 1219, 1222, 1236, 1238, 1254, 1256, 1257, 1258, 1259, 1267, 1268, 1269, 1272, 1278.
750	**841233**	Screw (Oil Pump Cover) (Used After Code Date 03120900). **––––––– Note –––––––** **692539** Screw (Oil Pump Cover) (Used Before Code Date 03121000).
773	**690875**	Retainer
774	**692067**	Screw (Stop Wire)
783	**695708**	Gear–Pinion (For Aluminum Ring Gear Only)
788	**691559**	Bracket–Fuel Pump
789	**691996**	Harness–Wiring **––––––– Note –––––––** **841318** Harness–Wiring Used on Type No(s). 1222, 1223.
797	**691029**	Nut (Brush Retainer)
797A	**693167**	Nut (Brush Retainer)
801	**808777**	Cap–Drive
801B	**691283**	Cap–Drive
801C	**808778**	Cap–Drive
802	**496813**	Cap–End
802A	**691286**	Cap–End
802C	**494988**	Cap–End
803	**690854**	Housing–Starter **––––––– Note –––––––** **820783** Housing–Starter Used on Type No(s). 1222, 1223.
803A	**693547**	Housing–Starter
803B		Housing–Starter (Serviced By **499521** Starter Motor Only)
803C	**494205**	Housing–Starter (4–3/8" Housing Length) **––––––– Note –––––––** **398892** Housing–Starter (4 9/16" Housing Length)
807	**●805557**	Spacer–Throttle
812	**△692055**	Nut (Rocker Cover) (Used Before Code Date 01120300).
813	**690635**	Clamp
816	**690706**	Washer (Oil Filter Adapter)

★ Included in Engine Gasket Set–Ref. No. 358.
● Included in Carburetor Overhaul Kit–Ref. No. 121.
◆ Included in Carburetor Gasket Set–Ref. No. 977.
△ Included in Valve Gasket Set–Ref. No. 1095.

Illustrations cover a range of engines. Parts shown without corresponding text may not be used on your specific engine.

REF. NO.	PART NO.	DESCRIPTION
819	**692056**	Screw (Muffler Bracket)(14 MM Long)
819	**692067**	Screw (Muffler Bracket)(Remote Lo Tone)
819A	**690943**	Screw (Muffler Bracket)(16 MM Long)
830	**809157**	Stud–Rocker Arm (Used After Code Date 96033100).
830A	**691497**	Stud–Rocker Arm (Used Before Code Date 96040100).
832	**691571**	Guard–Muffler
833A	**690872**	Screw (Air Cleaner Mounting Strap/Stud)
833B	**691593**	Screw (Air Cleaner Mounting Strap/Stud)
836	**691514**	Screw (Muffler Guard)
836A	**692067**	Screw (Muffler Guard)
837	**808085**	Spacer–Muffler (Includes 2)
840	**692096**	Kit–Panel
842	**★690611**	Seal–O Ring (Dipstick Tube)
843	**691322**	Sleeve–Lever
849	**691088**	Screw (Stub Shaft)
851	**493880**	Terminal–Spark Plug
862	**692153**	Strap/Stud–Air Cleaner Mounting
862C	**807563**	Strap/Stud–Air Cleaner Mounting
862D	**691565**	Strap/Stud–Air Cleaner Mounting
863	**691513**	Bracket–Muffler (Cylinder 2)(Side Outlet)
863A	**690756**	Bracket–Muffler (Cylinder 1)(Side Outlet)
865	**841312**	Cover–Air Guide (Black)
865A	**690901**	Cover–Air Guide (Black)
		––––––– Note –––––––
		690908 Cover–Air Guide (Black) Used on Type No(s). 0445, 1145.
		807653 Cover–Air Guide (Red) Used on Type No(s). 0030.
868	**★Δ691963**	Seal–Valve
871	**692057**	Bushing–Valve Guide
875	**690894**	Base–Air Cleaner (Plastic)
876	**696539**	Kit–Pinion Spring
877	**393456**	Wire/Connector–Alternator (White Dual Plug)
877B	**393537**	Wire/Connector–Alternator (Green)(Single Plug)
877C	**399916**	Wire/Connector–Alternator (2 Wires, 7–53/64” Long)(2 Bare Wire Ends, And Insulated Snap ConnectMale Pin Terminal)
877D	**698092**	Wire/Connector–Alternator
878	**691237**	Harness–Alternator
878A	**691955**	Harness–Alternator
878B	**691362**	Harness–Alternator (Single Lead) Used on Type No(s). 1155.
		––––––– Note –––––––
		691362 Harness–Alternator (1 Wire, 47–1/2” Long)(Male Pin Terminal, And Bare Wire End) Used on Type No(s). 1261.
879	**690757**	Cover–Carburetor
882	**692074**	Flange–Exhaust
883	**★Δ691613**	Gasket–Exhaust
884	**690898**	Clamp–Muffler
884A	**691956**	Clamp–Muffler
892	**692318**	Switch–Key
896	**691641**	Pin–Drive Retainer
899	**691077**	Washer (Starter Solenoid)
918	**393815**	Hose–Vacuum (Rocker Cover To Impulse Pump)(Cut To Required Length)
920	**691656**	Solenoid–Starter
		––––––– Note –––––––
		825418 Solenoid–Starter Used on Type No(s). 1223.
927	**691116**	Screw (Electronic Governor Module)
947A	**692094**	Solenoid–Fuel
955A	**807723**	Plug–Carburetor (Jet)

★ Included in Engine Gasket Set–Ref. No. 358.
● Included in Carburetor Overhaul Kit–Ref. No. 121.
◆ Included in Carburetor Gasket Set–Ref. No. 977.
Δ Included in Valve Gasket Set–Ref. No. 1095.

Illustrations cover a range of engines. Parts shown without corresponding text may not be used on your specific engine.

294400

REF. NO.	PART NO.	DESCRIPTION
957	**491367**	Cap–Fuel Tank (Plastic)
957A	**493988**	Cap–Fuel Tank (Plastic)
958	**698182**	Valve–Fuel Shut Off (Plastic)
958A	**698183**	Valve–Fuel Shut Off (Plastic)
958B	**692008**	Valve–Fuel Shut Off (Plastic)
967A	**272490**	Filter–Pre Cleaner
967B	**805267**	Filter–Pre Cleaner
967C	**271794**	Filter–Pre Cleaner
968A	**692097**	Cover–Air Cleaner
968B	**690694**	Cover–Air Cleaner
968C	**691910**	Cover–Air Cleaner
968D	**691755**	Cover–Air Cleaner
968E	**691334**	Cover–Air Cleaner
971A	**692537**	Screw (Air Cleaner Base to Carburetor)
971B	**690699**	Screw (Air Cleaner Base to Carburetor)
972	**492369**	Tank–Fuel (Plastic)
972A	**690663**	Tank–Fuel (Plastic)
988	**★692063**	Gasket–Oil Adapter
988A	**690687**	Gasket–Oil Adapter
990	**691959**	Key Set
994	**392390**	Arrestor–Spark
		––––––– Note –––––––
		808361 Arrestor–Spark Used on Type No(s). 1267.
996	**691577**	Shield–Carburetor
996C	**690696**	Shield–Carburetor
1004	**690743**	Duct–Air
1004B	**692538**	Duct–Air (Used With Plastic Air Cleaner Base)
1009	**806474**	Screw (Starter Motor)
1012	**690592**	Retainer–Link
1017	**690900**	Screen–Oil Pump
1019	**808035**	Kit–Label
1022	**★Δ806039**	Gasket–Rocker Cover
1023	**690758**	Cover–Rocker (Used After Code Date 98053100).
1023B	**691494**	Cover–Rocker (Used Before Code Date 98060100).
1023C	**690910**	Cover–Rocker (Cylinder 1)(With Fuel Pump) (Used After Code Date 98053100).
1023D	**691558**	Cover–Rocker (Used On Cylinder 1 Fuel Pump Applications) (Used Before Code Date 98060100).
1023E	**691531**	Cover–Rocker (Used On Engines Equipped With 9 Quart Fuel Tanks)
1024	**693185**	Pump–Oil
1025	**690689**	Spool–Governor
1026	**691836**	Rod–Push (Steel)
		––––––– Note –––––––
		691758 Rod–Push (Exhaust)(Aluminum)
1027	**492932**	Filter–Oil (2 1/4" Long) (Used After Code Date 95020500).
		––––––– Note –––––––
		491056 Filter–Oil (3 1/4" Long) (Used Before Code Date 95020600).
1028	**808033**	Adapter–Oil Filter (Horizontal Mounted Oil Filter)
		––––––– Note –––––––
		808235 Adapter–Oil Filter
1029	**807323**	Arm–Rocker (Used After Code Date 96033100).
1029A	**692103**	Arm–Rocker (Used Before Code Date 96040100).
1030	**691496**	Support–Rocker Arm
1031	**690693**	Shaft–Rocker Arm
1036	**806881**	Label–Emissions (Used After Code Date 99093000).
		––––––– Note –––––––
		806687 Label–Emissions (Used After Code Date 99092900 and Before Code Date 00070100).
		806583 Label–Emissions (Used After Code Date 98123100 and Before Code Date 99100100).
		499365 Label–Emissions (Used Before Code Date 99010100).
1038	**492374**	Rod–Fuel Shut Off
1038A	**691567**	Rod–Fuel Shut Off
1044	**692056**	Screw (Flywheel)
1046	**692082**	Plug–Blower Housing
1047	**807867**	Shaft–Stub
1048	**690669**	Module–Electronic Governor
1051	**691124**	Ring–Retaining
1051A	**691265**	Ring–Retaining

★ Included in Engine Gasket Set–Ref. No. 358.
● Included in Carburetor Overhaul Kit–Ref. No. 121.
◆ Included in Carburetor Gasket Set–Ref. No. 977.
Δ Included in Valve Gasket Set–Ref. No. 1095.

Illustrations cover a range of engines. Parts shown without corresponding text may not be used on your specific engine.

REF. NO.	PART NO.	DESCRIPTION
1054	**280275**	Tie–Cable
1058	**275368**	Operator's Manual
1083	**691626**	Nut (End Cap)
1083A	**690958**	Nut (End Cap)
1090	**691293**	Retainer–Brush
		––––––– Note –––––––
		825412 Retainer–Brush Used on Type No(s). 1223.
1091	**●691516**	Cap–Limiter
1095B	**808392**	Gasket Set–Valve
1100	**690973**	Pivot–Rocker Arm
1119	**691552**	Screw (Alternator)
1122	**93410**	Screw (Blower Housing Adapter)
1131	**806446**	Nut (Crankcase Cover/Sump) Used on Type No(s). 1278.
1134	**94464**	Washer (Pawl Friction Plate)
1134A	**94462**	Washer (Pawl Friction Plate)
1139	**806497**	Washer (Fuel Pump Bracket)
1148	**94504**	Screw (Clip)(Side Out)
1254	**807084**	Screw (Rocker Cover Stud)(Used on Stud For Rocker Cover) (Used After Code Date 01120200).
1330	**272144**	Repair Manual

★ Included in Engine Gasket Set–Ref. No. 358.
● Included in Carburetor Overhaul Kit–Ref. No. 121.
◆ Included in Carburetor Gasket Set–Ref. No. 977.
Δ Included in Valve Gasket Set–Ref. No. 1095.

Illustrations cover a range of engines. Parts shown without corresponding text may not be used on your specific engine.