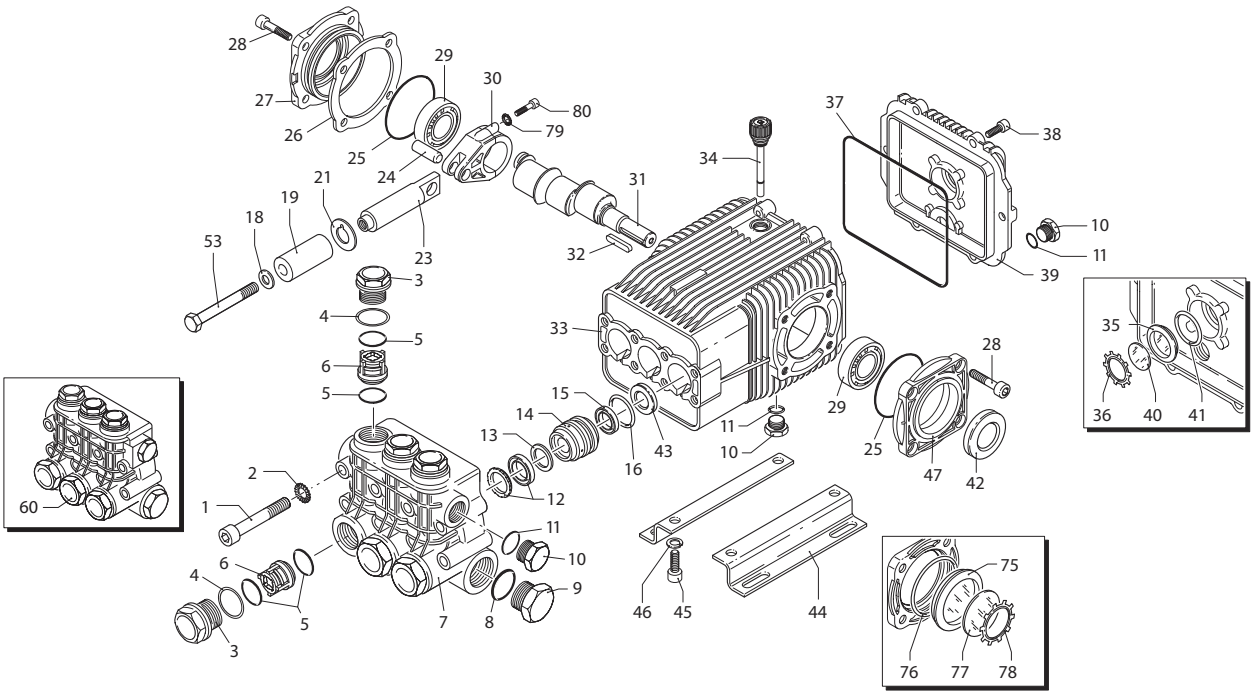

Repair Kits

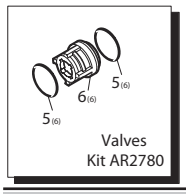

Valves
Kit AR2780

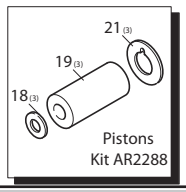

Pistons
Kit AR2288

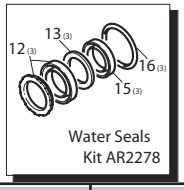

Water Seals
Kit AR2278

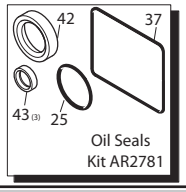

Oil Seals
Kit AR2781

Piston Guide
Kit 2279

Special Parts / Kits

Code	Description	Qty.
AR980069	Packing extractor	1
AR2748	Rail kit 1-1/4"- 2 Rails - 4 Bolts - 4 Washers	1

Pos	Code	Description	Qty.
1	AR1940260	Head bolt M10x80 (442 in/lbs)	8
2	AR650530	Lockwasher	8
3	AR1940140	Valve cap (602 in/lbs)	6
4	AR1940150	Ring	6
5	AR1140450	O-Ring ø20.24x2.62	12
6	AR1949050	Complete valve	6
7	AR1940021	Pump head	1
8	AR550350	O-Ring ø23.81x2.62	1
9	AR1140300	Plug 3/4"G	1
10	AR1980740	Plug 3/8"G	3
11	AR740290	O-Ring ø14x1.78	3
12	AR1940440	Gasket w/ring	3
13	AR1940430	Front piston guide	3
14	AR1942410	Piston guide	3
15	AR840280	Gasket	3
16	AR820490	O-Ring ø34.65x1.78	3
18	AR1340600	Washer - Copper	3
19	AR1942330	Piston	3
21	AR1383190	Spacer	3
23	AR1940960	Guiding piston	3
24	AR1940060	Pistonpin	3
25	AR1941380	O-Ring ø66.34x2.62	2
26	AR1941390	Shim 0.05mm	1-3
	AR1941400	Shim 0.10mm	1-3
	AR1941410	Shim 0.19mm	1-3
	AR1941420	Shim 0.25mm	1-3
27	AR1949011	Side cover w/sight glass	1
28	AR850370	Bolt M8x16 (217 in/lbs)	8
29	AR1140410	Bearing	2
30	AR1940050	Con-rod (89 in/lbs)	3
31	AR1940180	Crankshaft 24mm	■ 1
	AR1940520	Crankshaft 24mm	● 1
32	AR650250	Key	1
33	AR1941330	Pump housing	1
34	AR1140370	Oil cap	1
35	AR1260250	Oil sight glass	1
36	AR1260430	Snap ring	1

Pos	Code	Description	Qty.
37	AR1940410	O-Ring ø132x3	1
38	AR1200430	Bolt M6x16 (89 in/lbs)	6
39	AR1949010	Compete cover	1
40	AR1780690	Contrast disc	1
41	AR1140450	O-Ring ø20.24x2.62	1
42	AR820680	Seal ring	1
43	AR1940560	Seal	3
44	AR1940370	Rail 1-1/4"	2
45	AR1940380	Bolt	4
46	AR200231	Washer	4
47	AR1941240	Open bearing support	1
53	AR1941940	Bolt M6x60	3
60	AR1949216	Complete pump head	1
75	AR1941270	Oil sight glass	1
76	AR100410	O-Ring ø34.6x2.62	1
77	AR1941260	Contrast disc	1
78	AR1941290	Seal	1
79	AR1380510	Lockwasher	6
80	AR1381550	Con-rod bolt	6
	AR64516	Oil	2

OIL CAPACITY - 32 OZ

Legend

ø 20	ø 20
For ●	For ■
XW -M15.30	XW-M21.28

NORTH AMERICA
First Choice When Quality Matters