IRFA100

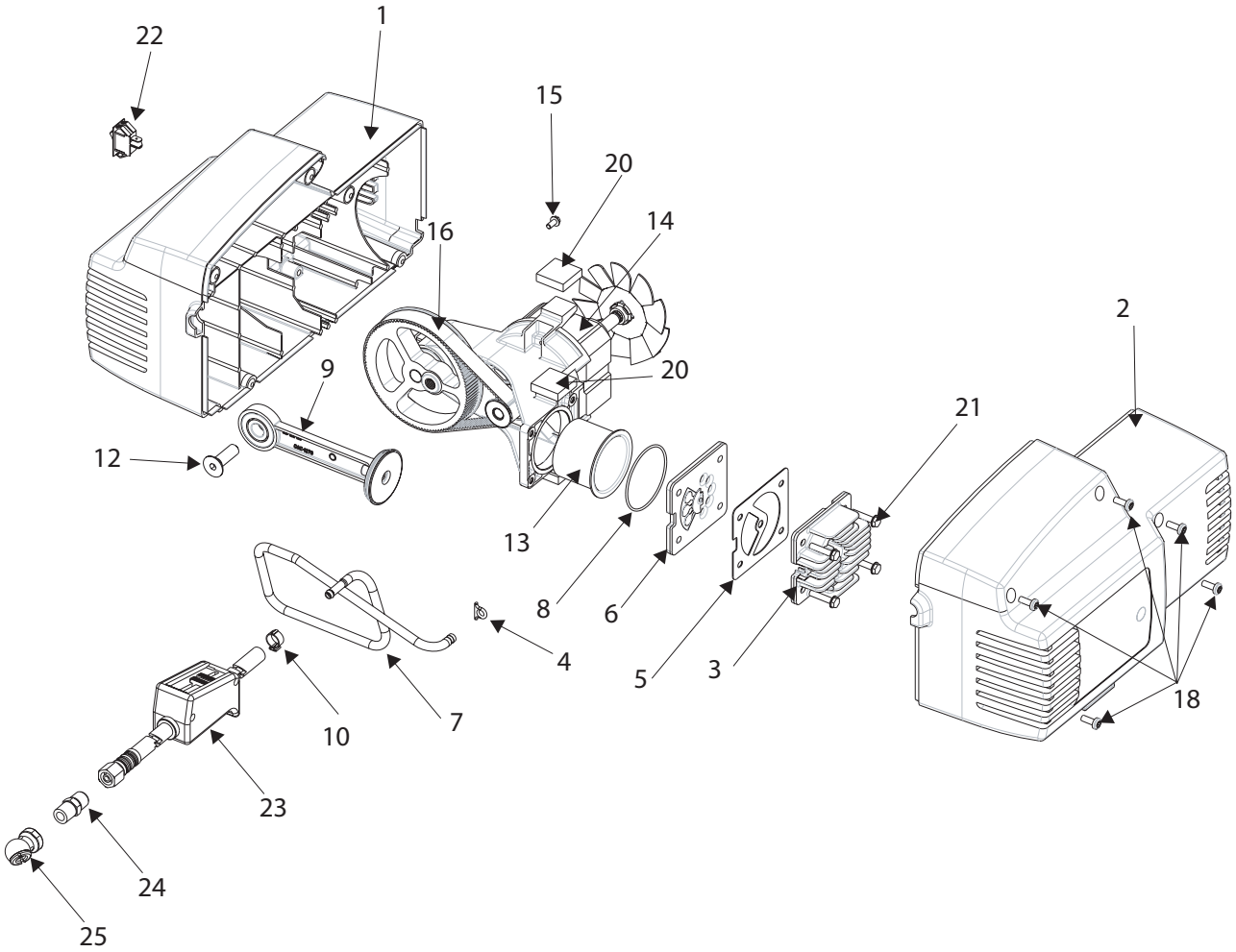

FA100/FAC100

Key No	Part Number	Description
1	AC-0471	Shroud, Left
2	AC-0470	Shroud, Right
3	CAC-1196	Cylinder Head
4	* CAC-1212	Tube Seal
5	* CAC-1199	Gasket Head
6	Z-D24985	Valve Plate Assembly
7	CAC-1194-1	Outlet Tube
8	* SSG-8169	O-ring
9	+ —————	Rod Assembly
10	CAC-1206-1	Clamp
12	x SSF-3147	Screw, 3/8-16
13	+ —————	Cylinder Sleeve
14	—————	Endbell Assembly
15	x SUDL-9-1	Screw, 8-32x .375/.344
16	AC-0815	Timing Belt
18	x SSF-3156	Screw, 10-9x.50Plastite
20	* D25731	Pump Isolator (5 used)
21	x SSF-995	Screw #10-24 x 7/8 (4 used)
22	SSS-16	Switch (On/Off)
23	CAC-4076	Pressure Valve Assembly
24	D26889	Adapter
25	SSH-8	Air Chuck

Not Shown

* CAC-1211	Housing Isolator
D23786	Motor Cord
D23787	Jumper Wire

Kits Available

* KK-4930	Isolator Kit
+ KK-4964	Connecting Rod Kit
x KK-4929	Fastener Kit